OCB: A Block-Cipher Mode of Operation for Efficient Authenticated Encryption

PHILLIP ROGAWAY
University of California at Davis and Chiang Mai University

MIHIR BELLARE
University of California at San Diego

JOHN BLACK
University of Colorado at Boulder

We describe a parallelizable block-cipher mode of operation that simultaneously provides privacy and authenticity. OCB encrypts-and-authenticates a nonempty string $M \in \{0,1\}^*$ using $\lceil |M|/n \rceil + 2$ block-cipher invocations, where n is the block length of the underlying block cipher. Additional overhead is small. OCB refines a scheme, IAPM, suggested by Charanjit Jutla. Desirable properties of OCB include the ability to encrypt a bit string of arbitrary length into a ciphertext of minimal length, cheap offset calculations, cheap key setup, a single underlying cryptographic key, no extended-precision addition, a nearly optimal number of block-cipher calls, and no requirement for a random IV. We prove OCB secure, quantifying the adversary's ability to violate the mode's privacy or authenticity in terms of the quality of its block cipher as a pseudorandom permutation (PRP) or as a strong PRP, respectively.

Categories and Subject Descriptors: E.3 [**Data Encryption**]: Standards

General Terms: Security, Performance, Theory

Additional Key Words and Phrases: AES, authenticity, block-cipher usage, cryptography, encryption, integrity, modes of operation, provable security, standards

Phillip Rogaway, Department of Computer Science, Engineering II Building, University of California, Davis, CA 95616 USA; and Department of Computer Science, Faculty of Science, Chiang Mai University, Chiang Mai 50200 Thailand; email: rogaway@cs.ucdavis.edu, web: www.cs.ucdavis.edu/∼rogaway
Mihir Bellare, Department of Computer Science and Engineering, University of California at San Diego, 9500 Gilman Drive, La Jolla, CA 92093 USA; email: mihir@cs.ucsd.edu, web: www-cse.ucsd.edu/users/mihir
John Black, Department of Computer Science, 430 UCB, University of Colorado, Boulder, CO 80309 USA; email: jrblack@cs.colorado.edu, web: www.cs.colorado.edu/∼jrblack

An earlier version of this paper appears as [Rogaway et al. 2001b].

Permission to make digital/hard copy of all or part of this material without fee for personal or classroom use provided that the copies are not made or distributed for profit or commercial advantage, the ACM copyright/server notice, the title of the publication, and its date appear, and notice is given that copying is by permission of the ACM, Inc. To copy otherwise, to republish, to post on servers, or to redistribute to lists requires prior specific permission and/or a fee.
© 2003 ACM 0000-0000/2003/0000-0001 $5.00

1. INTRODUCTION

Background. An authenticated-encryption scheme is a shared-key encryption scheme whose goal is to provide both privacy and authenticity. The encryption algorithm takes a key, a plaintext, and an initialization vector (IV), and it returns a ciphertext. The decryption algorithm takes a key, a ciphertext, and an IV, and it returns either a plaintext or a special symbol, Invalid. We refer to the IV as the *nonce*, to reflect the requirements we will make on it. In addition to the customary privacy goal, an authenticated-encryption scheme aims for authenticity: if an adversary should try to create some new ciphertext, the decryption algorithm will almost certainly regard it as Invalid.

An authenticated-encryption scheme can be constructed by appropriately combining an encryption scheme and a message authentication code (MAC), an approach used pervasively in practice and in standards. (Analyses of such methods are provided in [Bellare and Namprempre 2000; Krawczyk 2001].) But an attractive and long-standing goal has been an authenticated-encryption scheme having computational cost significantly lower than the cost to encrypt plus the cost to MAC. The classical approach for trying to do this is to encrypt-with-redundancy, where one appends a non-cryptographic checksum to the message before encrypting it, typically with CBC mode. Many such schemes have been broken. Recently, however, Charanjit Jutla has proposed two authenticated-encryption schemes supported by a claim of provable security [Jutla 2001a]. Virgil Gligor and Pompiliu Donescu then described a different authenticated-encryption scheme [Gligor and Donescu 2002]. We continue in this line of work. See Appendix A for further history.

OCB mode. This paper describes a new mode of operation, OCB, which refines one of Jutla's schemes, IAPM [Jutla 2001a]. OCB (which stands for "offset codebook") retains the principal characteristics of IAPM: it is fully parallelizable and adds minor overhead compared to conventional, privacy-only modes. But OCB combines the following additional features:

- *Arbitrary-length messages + minimal-length ciphertexts*: Any string $M \in \{0,1\}^*$ can be encrypted; in particular, $|M|$ need not be a multiple of the block length n. What is more, the resulting ciphertexts are as short as possible.
- *Minimal IV requirements*: Like other encryption modes, OCB requires an IV. The entity that encrypts chooses a new IV nonce for every message with the only restriction that no IV is used twice. We henceforth refer to the IV as the *nonce*.
- *Nearly optimal number of block-cipher calls*: OCB uses $\lceil |M|/n \rceil + 2$ block-cipher invocations to encrypt-and-authenticate a nonempty message M.
- *Single underlying key*: The key used for OCB is a single block-cipher key, and all block-cipher invocations are keyed by this one key.
- *Efficient offset calculations*: As with other recent methods, we require a sequence of *offsets*. We generate them in a particularly cheap way, each offset requiring a few machine cycles and no extended-precision arithmetic.

Achieving the properties above requires putting together a variety of "tricks" that

work together in just the right way. Many plausible-looking constructions that we considered turned out to be wrong.

Performance. Experiments by Lipmaa on a Pentium III processor show that OCB is about 6.5% slower than the privacy-only mode CBC, and about 54% the speed of CBC encryption combined with the CBC MAC [Lipmaa 2001]. These figures assume a block cipher of AES128 [US National Institute of Standards 2001].

In settings where there is adequate opportunity for parallelism, OCB will be faster than CBC. Parallelizability is important for obtaining the highest speeds from special-purpose hardware, and it may become useful on commodity processors. For special-purpose hardware, one may want to encrypt-and-authenticate at speeds near 10 Gbits/second—an impossible task, with today's technology, for modes like CBC encryption and the CBC MAC. (One could always create a mode that interleaves message blocks fed into separate CBC encryption or CBC MAC calculations, but that would be a new mode, and one with many drawbacks.) For commodity processors, there is an architectural trend towards highly pipelined machines with multiple instruction pipes and lots of registers. Optimally exploiting such features necessitates algorithms that have plenty to do in parallel.

Security properties. We prove OCB secure, in the sense of reduction-based cryptography. Specifically, we prove indistinguishability under chosen-plaintext attack [Bellare et al. 1997; Goldwasser and Micali 1984] and authenticity of ciphertexts [Bellare and Namprempre 2000; Bellare and Rogaway 2000; Katz and Yung 2000b]. This combination implies indistinguishability under the strongest form of chosen-ciphertext attack (CCA) and that, in turn, is equivalent to non-malleability under CCA [Bellare et al. 1998; Bellare and Namprempre 2000; Dolev et al. 2000; Katz and Yung 2000b; 2000a]. (Non-malleability refers to an adversary's inability to modify a ciphertext in a way that makes related the two underlying plaintexts.) Our proof of privacy assumes that the underlying block cipher is good in the sense of a pseudorandom permutation (PRP) [Bellare et al. 2000; Luby and Rackoff 1988], while our proof of authenticity assumes that the block cipher is a strong PRP [Luby and Rackoff 1988]. Our results are quantitative; the security analysis is in the concrete-security paradigm.

We emphasize that OCB has stronger security properties than standard modes. In particular, non-malleability and indistinguishability under CCA are not achieved by CBC, or by any other standard mode, but these properties are achieved by OCB. We believe that the lack of strong security properties has been a problem for the standard modes of operation, because many users of encryption implicitly assume these properties when designing their protocols. For example, it is common to see protocols that use symmetric encryption in order to "bind together" the parts of a plaintext, or that encrypt related messages as a way to do a "handshake." Standard modes do not support such practices. This fact has sometimes led practitioners to incorrectly apply the standard modes, or to invent or select wrong ways to try to encrypt with authenticity (a well-known example is the use of PCBC mode [Meyer and Matyas 1982] in Kerberos v.4 [Steiner et al. 1988]). We believe that authenticated encryption modes are less likely to be misused because many common ways of using a mode of operation that are incorrect when the mode provides privacy

only become correct when it provides both privacy and authenticity.

By way of comparison, a chosen-ciphertext attack by Bleichenbacher on the public-key encryption scheme of RSA PKCS #1, v.1.5, motivated the company that controls this de facto standard to promptly upgrade its scheme [Bleichenbacher 1998; RSA Laboratories 1998]. In this public-key setting, it was even a concern if mis-implementations could lead to effective attack [Manger 2001]. In contrast, people seem to accept as a matter of course symmetric encryption schemes which are not even non-malleable. This may be changing, as it becomes clear how damaging and widespread side-channel and chosen-ciphertext attacks can be [Vaudenay 2002; Black and Urtubia 2002].

2. PRELIMINARIES

NOTATION. If a and b are integers, $a \leq b$, then $[a..b]$ is the set $\{a, a+1, \ldots, b\}$. If $i \geq 1$ is an integer then $\mathsf{ntz}(i)$ is the number of trailing 0-bits in the binary representation of i (equivalently, $\mathsf{ntz}(i)$ is the largest integer z such that 2^z divides i). So, for example, $\mathsf{ntz}(7) = 0$ and $\mathsf{ntz}(8) = 3$.

A *string* is a finite sequence of symbols, each symbol being 0 or 1. The string of length 0 is called the *empty string* and is denoted ε. Let $\{0,1\}^*$ denote the set of all strings. If $A, B \in \{0,1\}^*$ then $A\,B$, or $A \parallel B$, is their concatenation. If $A \in \{0,1\}^*$ and $A \neq \varepsilon$ then $\mathsf{firstbit}(A)$ is the first bit of A and $\mathsf{lastbit}(A)$ is the last bit of A. Let i, n be nonnegative integers. Then 0^i and 1^i denote the strings of i 0's and 1's, respectively. Let $\{0,1\}^n$ denote the set of all strings of length n. If $A \in \{0,1\}^*$ then $|A|$ denotes the length of A, in bits, while $\|A\|_n = \max\{1, \lceil |A|/n \rceil\}$ denotes the length of A in n-bit blocks, where the empty string counts as one block. For $A \in \{0,1\}^*$ and $|A| \leq n$, $\mathsf{zpad}_n(A)$ is the string $A\,0^{n-|A|}$. With n understood we will write $A\,0^*$ for $\mathsf{zpad}_n(A)$. If $A \in \{0,1\}^*$ and $\tau \in [0..|A|]$ then $A\,[\text{first } \tau \text{ bits}]$ and $A\,[\text{last } \tau \text{ bits}]$ denote the first τ bits of A and the last τ bits of A, respectively. Both of these values are the empty string if $\tau = 0$. If $A, B \in \{0,1\}^*$ then $A \oplus B$ is the bitwise xor of $A\,[\text{first } \ell \text{ bits}]$ and $B\,[\text{first } \ell \text{ bits}]$, where $\ell = \min\{|A|, |B|\}$ (where $\varepsilon \oplus A = A \oplus \varepsilon = \varepsilon$). So, for example, $1001 \oplus 11 = 01$. If $A = a_{n-1} \cdots a_1 a_0 \in \{0,1\}^n$ then $\mathsf{str2num}(A)$ is the number $\sum_{i=0}^{n-1} 2^i a_i$. If $a \geq 0$ is a number then $\mathsf{num2str}_n(a)$ is the n-bit string A such that $\mathsf{str2num}(A) = a$. Let $\mathrm{len}_n(A) = \mathsf{num2str}_n(|A| \bmod 2^n)$. We omit the subscript when n is understood. Note that if $|A| \geq 2^n$ (which, in practice, will never happen) then $\mathrm{len}_n(A)$ does not encode all of $|A|$ (since we don't have enough bits).

If $A = a_{n-1}a_{n-2} \cdots a_1 a_0 \in \{0,1\}^n$ then the n-bit string $a_{n-2}a_{n-3} \cdots a_1 a_0 0$, denoted $A{\ll}1$, is a left shift of A by one bit (the first bit of A disappearing and a zero coming into the last bit), while $A{\gg}1$ is the n-bit string $0a_{n-1}a_{n-2} \ldots a_2 a_1$ which is a right shift of A by one bit (the last bit disappearing and a zero coming into the first bit).

In pseudocode we write "Partition M into $M[1] \cdots M[m]$" as shorthand for "Let $m = \|M\|_n$ and let $M[1], \ldots, M[m]$ be strings such that $M[1] \cdots M[m] = M$ and $|M[i]| = n$ for $1 \leq i < m$." We write "Partition $\mathcal{C}$ into $C[1] \cdots C[m]T$" as shorthand for "if $|\mathcal{C}| < \tau$ then return INVALID. Otherwise, let $C = \mathcal{C}\,[\text{first } |\mathcal{C}| - \tau \text{ bits}]$, let $T = \mathcal{C}\,[\text{last } \tau \text{ bits}]$, let $m = \|C\|_n$, and let $C[1], \ldots, C[m]$ be strings such that $C[1] \cdots C[m] = C$ and $|C[i]| = n$ for $1 \leq i < m$." Recall that $\|M\|_n =$

$\max\{1, \lceil |M|/n \rceil\}$, so the empty string partitions into $m = 1$ block, that one block being the empty string.

THE FIELD WITH 2^n POINTS. Let $\mathrm{GF}(2^n)$ denote the field with 2^n points. We interchangeably think of a point a in $\mathrm{GF}(2^n)$ in any of the following ways: (1) as an abstract point in a field; (2) as an n-bit string $a_{n-1} \ldots a_1 a_0 \in \{0,1\}^n$; (3) as a formal polynomial $a(\mathtt{x}) = a_{n-1}\mathtt{x}^{n-1} + \cdots + a_1\mathtt{x} + a_0$ with binary coefficients; (4) as an integer between 0 and $2^n - 1$, where the string $a \in \{0,1\}^n$ corresponds to the number $\mathsf{str2num}(a)$. For example, one can regard the string $a = 0^{125}101$ as a 128-bit string, as the number 5, as the polynomial $\mathtt{x}^2 + 1$, or as an abstract point in $\mathrm{GF}(2^{128})$. We write $a(\mathtt{x})$ instead of a if we wish to emphasize that we are thinking of a as a polynomial.

To add two points in $\mathrm{GF}(2^n)$, take their bitwise xor. We denote this operation by $a \oplus b$. To multiply two points in the field, first fix an irreducible polynomial $p_n(\mathtt{x})$ having binary coefficients and degree n: say the lexicographically first polynomial among the irreducible degree n polynomials having a minimum number of nonzero coefficients. For $n = 128$, the indicated polynomial is $p_{128}(\mathtt{x}) = \mathtt{x}^{128}+\mathtt{x}^7+\mathtt{x}^2+\mathtt{x}+1$. Some other $p_n(\mathtt{x})$-values are $\mathtt{x}^{64}+\mathtt{x}^4+\mathtt{x}^3+\mathtt{x}+1$ (for $n = 64$) and $\mathtt{x}^{256}+\mathtt{x}^{10}+\mathtt{x}^5+\mathtt{x}^2+1$ (for $n = 256$). To multiply $a, b \in \mathrm{GF}(2^n)$, which we denote $a \cdot b$, regard a and b as polynomials $a(\mathtt{x}) = a_{n-1}\mathtt{x}^{n-1} + \cdots + a_1\mathtt{x} + a_0$ and $b(\mathtt{x}) = b_{n-1}\mathtt{x}^{n-1} + \cdots + b_1\mathtt{x} + b_0$, form their product $c(\mathtt{x})$ over $\mathrm{GF}(2)$, and take the remainder one gets when dividing $c(\mathtt{x})$ by $p_n(\mathtt{x})$.

It is computationally simple to multiply $a \in \{0,1\}^n$ by $\mathtt{x}$. We illustrate the method for $n = 128$, in which case multiplying $a = a_{n-1} \cdots a_1 a_0$ by $\mathtt{x}$ yields $a_{n-1}\mathtt{x}^n + a_{n-2}\mathtt{x}^{n-1} + a_1\mathtt{x}^2 + a_0\mathtt{x}$. Thus, if the first bit of a is 0, then $a \cdot \mathtt{x} = a{\ll}1$. If the first bit of a is 1 then we must add $\mathtt{x}^{128}$ to $a{\ll}1$. Since $p_{128}(\mathtt{x}) = \mathtt{x}^{128} + \mathtt{x}^7 + \mathtt{x}^2 + \mathtt{x} + 1 = 0$ we know that $\mathtt{x}^{128} = \mathtt{x}^7 + \mathtt{x}^2 + \mathtt{x} + 1$, so adding $\mathtt{x}^{128}$ means to xor by $0^{120}10000111$. In summary, when $n = 128$,

$$a \cdot \mathtt{x} = \begin{cases} a{\ll}1 & \text{if } \mathsf{firstbit}(a) = 0 \\ (a{\ll}1) \oplus 0^{120}10000111 & \text{if } \mathsf{firstbit}(a) = 1 \end{cases}$$

It is similarly easy to divide $a \in \{0,1\}^{128}$ by $\mathtt{x}$ (i.e., to multiply a by the multiplicative inverse of $\mathtt{x}$). If the last bit of a is 0, then $a \cdot \mathtt{x}^{-1}$ is $a{\gg}1$. If the last bit of a is 1 then we must add (xor) to $a{\gg}1$ the value $\mathtt{x}^{-1}$. Since $\mathtt{x}^{128} = \mathtt{x}^7 + \mathtt{x}^2 + \mathtt{x} + 1$ we have that $\mathtt{x}^{-1} = \mathtt{x}^{127} + \mathtt{x}^6 + \mathtt{x} + 1 = 10^{120}1000011$. In summary, when $n = 128$,

$$a \cdot \mathtt{x}^{-1} = \begin{cases} a{\gg}1 & \text{if } \mathsf{lastbit}(a) = 0 \\ (a{\gg}1) \oplus 10^{120}1000011 & \text{if } \mathsf{lastbit}(a) = 1 \end{cases}$$

Note that the point $\mathit{huge} = \mathtt{x}^{-1}$ is a large number (when viewed as such); in particular, it starts with a 1 bit, so $\mathit{huge} \geq 2^{n-1}$.

If $L \in \{0,1\}^n$ and $i \geq -1$, we write $L(i)$ as shorthand for $L \cdot \mathtt{x}^i$. Using the equations just given, we have an easy way to compute from L the values $L(-1)$, $L(0)$, $L(1), \ldots, L(\mu)$, where μ is a small number.

GRAY CODES. For $\ell \geq 1$, a Gray code is an ordering $\gamma^\ell = (\gamma_0^\ell \;\; \gamma_1^\ell \;\; \ldots \;\; \gamma_{2^\ell-1}^\ell)$ of $\{0,1\}^\ell$ such that successive points differ (in the Hamming sense) by just one

bit. For n a fixed number, OCB makes use of the "canonical" Gray code $\gamma = \gamma^n$ constructed by $\gamma^1 = (0\ 1)$ and, for $\ell > 0$,

$$\gamma^{\ell+1} = (\ 0\gamma_0^\ell \quad 0\gamma_1^\ell \quad \cdots \quad 0\gamma_{2^\ell-2}^\ell \quad 0\gamma_{2^\ell-1}^\ell \quad 1\gamma_{2^\ell-1}^\ell \quad 1\gamma_{2^\ell-2}^\ell \quad \cdots \quad 1\gamma_1^\ell \quad 1\gamma_0^\ell\ ).$$

It is easy to see that γ is a Gray code. What is more, for $1 \le i \le 2^n - 1$, $\gamma_i = \gamma_{i-1} \oplus (0^{n-1}1 \ll \mathsf{ntz}(i))$. This makes it easy to compute successive points.

We emphasize these characteristics of the Gray-code values $\gamma_1, \gamma_2, \ldots, \gamma_{2^n-1}$: that they are distinct and different from 0; that $\gamma_1 = 1$; and that $\gamma_i < 2i$.

Let $L \in \{0,1\}^n$ and consider the problem of successively forming the strings $\gamma_1 \cdot L$, $\gamma_2 \cdot L$, $\gamma_3 \cdot L$, …, $\gamma_m \cdot L$. Of course $\gamma_1 \cdot L = 1 \cdot L = L$. Now, for $i \ge 2$, assume one has already produced $\gamma_{i-1} \cdot L$. Since $\gamma_i = \gamma_{i-1} \oplus (0^{n-1}1 \ll \mathsf{ntz}(i))$ we know that

$$\begin{aligned}
\gamma_i \cdot L &= (\gamma_{i-1} \oplus (0^{n-1}1 \ll \mathsf{ntz}(i))) \cdot L \\
&= (\gamma_{i-1} \cdot L) \oplus (0^{n-1}1 \ll \mathsf{ntz}(i)) \cdot L \\
&= (\gamma_{i-1} \cdot L) \oplus (L \cdot \mathtt{x}^{\mathsf{ntz}(i)}) \\
&= (\gamma_{i-1} \cdot L) \oplus L(\mathsf{ntz}(i)).
\end{aligned}$$

That is, the ith word in the sequence $\gamma_1 \cdot L, \gamma_2 \cdot L, \gamma_3 \cdot L, \ldots$ is obtained by xoring the previous word with $L(\mathsf{ntz}(i))$. Had the sequence we were considering been $\gamma_1 \cdot L \oplus R$, $\gamma_2 \cdot L \oplus R$, $\gamma_3 \cdot L \oplus R, \ldots$, the ith word would be formed in the same way for $i \ge 2$, but the first word in the sequence would have been $L \oplus R$ instead of L.

3. THE SCHEME

Parameters. To use OCB one must specify a block cipher and a tag length. The *block cipher* is a function $E\colon \mathcal{K} \times \{0,1\}^n \to \{0,1\}^n$ where each $E(K,\cdot) = E_K(\cdot)$ is a permutation on $\{0,1\}^n$. Here $\mathcal{K}$ is the set of possible keys (a finite nonempty set) and n is the block length. We insist that $n \ge 64$ and discourage $n < 128$. The *tag length* is an integer $\tau \in [0..n]$. By trivial means, the adversary will be able to forge a valid ciphertext with probability $2^{-\tau}$. The popular block cipher to use with OCB is likely to be AES [US National Institute of Standards 2001]. As for the tag length, a suggested default of $\tau = 64$ is reasonable. Tags of 32 bits are standard in retail banking. Tags of 96 bits are used in IPSec. Using a tag of more than 80 bits adds questionable security benefit, though it does lengthen each ciphertext.

We let OCB-E denote the OCB mode of operation using block cipher E and an unspecified tag length. We let OCB$[E,\tau]$ denote the OCB mode of operation using block cipher E and tag length τ.

Nonces. Encryption under OCB mode requires an n-bit nonce, N. The nonce would typically be a counter (maintained by the sender) or a random value (selected by the sender). Security is maintained even if the adversary can control the nonce, subject to the constraint that no nonce may be repeated within the current session (that is, during the period of use of the current encryption key). The nonce need not be random, unpredictable, or secret.

The nonce N is needed both to encrypt and to decrypt. Typically it would be communicated, in the clear, along with the ciphertext. However, it is out-of-scope

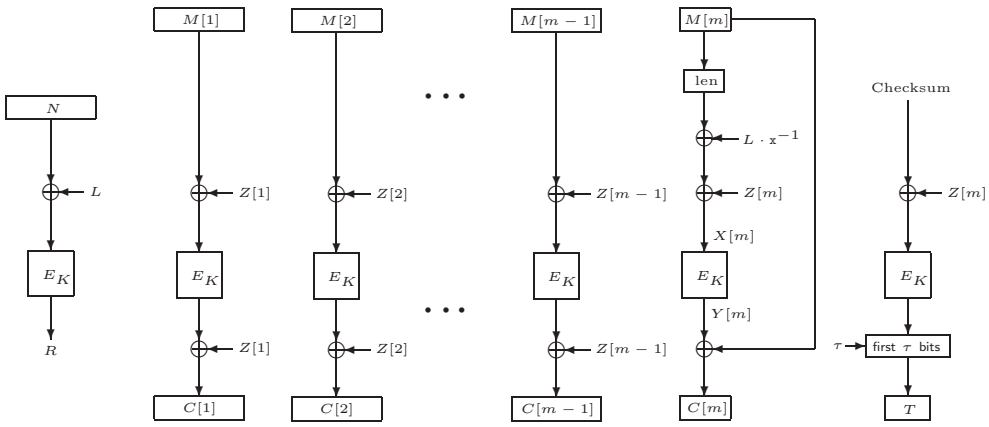

Algorithm OCB.Enc$_K$ (N, M)

Partition M into $M[1] \cdots M[m]$
$L \leftarrow E_K(0^n)$
$R \leftarrow E_K(N \oplus L)$
for $i \leftarrow 1$ **to** m **do** $Z[i] = \gamma_i \cdot L \oplus R$
for $i \leftarrow 1$ **to** $m-1$ **do**
  $C[i] \leftarrow E_K(M[i] \oplus Z[i]) \oplus Z[i]$
$X[m] \leftarrow \mathrm{len}(M[m]) \oplus L \cdot \mathtt{x}^{-1} \oplus Z[m]$
$Y[m] \leftarrow E_K(X[m])$
$C[m] \leftarrow Y[m] \oplus M[m]$
$C \leftarrow C[1] \cdots C[m]$
Checksum $\leftarrow$
  $M[1] \oplus \cdots \oplus M[m-1] \oplus C[m]\,0^* \oplus Y[m]$
$T \leftarrow E_K(\text{Checksum} \oplus Z[m])$ [first τ bits]
return $\mathcal{C} \leftarrow C \parallel T$

Algorithm OCB.Dec$_K$ $(N, \mathcal{C})$

Partition $\mathcal{C}$ into $C[1] \cdots C[m]\,T$
$L \leftarrow E_K(0^n)$
$R \leftarrow E_K(N \oplus L)$
for $i \leftarrow 1$ **to** m **do** $Z[i] = \gamma_i \cdot L \oplus R$
for $i \leftarrow 1$ **to** $m-1$ **do**
  $M[i] \leftarrow E_K^{-1}(C[i] \oplus Z[i]) \oplus Z[i]$
$X[m] \leftarrow \mathrm{len}(C[m]) \oplus L \cdot \mathtt{x}^{-1} \oplus Z[m]$
$Y[m] \leftarrow E_K(X[m])$
$M[m] \leftarrow Y[m] \oplus C[m]$
$M \leftarrow M[1] \cdots M[m]$
Checksum $\leftarrow$
  $M[1] \oplus \cdots \oplus M[m-1] \oplus C[m]\,0^* \oplus Y[m]$
$T' \leftarrow E_K(\text{Checksum} \oplus Z[m])$ [first τ bits]
if $T = T'$ **then return** M
  else return INVALID

Fig. 1. **OCB encryption.** The message to encrypt is M and the key is K. Message M is written as $M = M[1]M[2] \cdots M[m-1]M[m]$ where $m = \max\{1, \lceil |M|/n \rceil\}$ and $|M[1]| = |M[2]| = \cdots = |M[m-1]| = n$. Nonce N is a non-repeating value selected by the party that encrypts. It, along with ciphertext $\mathcal{C} = C[1]C[2]C[3] \cdots C[m-1]C[m]\,T$, is needed to decrypt. The Checksum is $M[1] \oplus \cdots \oplus M[m-1] \oplus C[m]\,0^* \oplus Y[m]$. Offset $Z[1] = L \oplus R$ while, for $i \geq 2$, $Z[i] = Z[i-1] \oplus L(\mathsf{ntz}(i))$. String L is defined by applying E_K to the fixed string 0^n. For $Y[m] \oplus M[m]$ and $Y[m] \oplus C[m]$, truncate $Y[m]$ if it is longer than the other operand. By $C[m]\,0^*$ we mean $C[m]$ padded on the right with 0-bits to get to length n. Function len represents the length of its argument, mod 2^n, as an n-bit string.

how the nonce is communicated to the party who will decrypt. In particular, we do not regard the nonce as part of the ciphertext.

Definition of the mode. See Figure 1 for a definition and illustration of OCB. The figure defines OCB encryption and decryption. The key space for OCB is the key space $\mathcal{K}$ for the underlying block cipher E.

An equivalent description. The following description may clarify what a typical implementation might do.

Key generation. Choose a random key $K \xleftarrow{\$} \mathcal{K}$ for the block cipher. The key K is provided to both the entity that encrypts and the entity that decrypts.

Key setup. For the party that encrypts, do any key setup associated to block-cipher enciphering. For the party that decrypts, do any key setup associated to block-cipher enciphering and deciphering. Let $L \leftarrow E_K(0^n)$. Let m bound the maximum number of n-bit blocks that any message which will be encrypted or decrypted may have. Let $\mu \leftarrow \lceil \log_2 m \rceil$. Let $L(0) \leftarrow L$ and, for $i \in [1..\mu]$, compute $L(i) \leftarrow L(i-1) \cdot \mathtt{x}$ using a shift and a conditional xor, as described in Section 2. Compute $L(-1) \leftarrow L \cdot \mathtt{x}^{-1}$ using a shift and a conditional xor, as described in Section 2. Save the values $L(-1)$, $L(0)$, $L(1), \ldots$, $L(\mu)$ in a table.

Encryption. To encrypt plaintext $M \in \{0,1\}^*$ using key K and nonce $N \in \{0,1\}^n$, obtaining a ciphertext $\mathcal{C}$, do the following. Let $m \leftarrow \lceil |M|/n \rceil$. If $m = 0$ then let $m \leftarrow 1$. Let $M[1], \ldots, M[m]$ be strings such that $M[1] \cdots M[m] = M$ and $|M[i]| = n$ for $i \in [1..m-1]$. Let Offset $\leftarrow E_K(N \oplus L)$. Let Checksum $\leftarrow 0^n$. For $i \leftarrow 1$ to $m-1$, do the following: let Checksum $\leftarrow$ Checksum $\oplus M[i]$; let Offset $\leftarrow$ Offset $\oplus L(\mathsf{ntz}(i))$; let $C[i] \leftarrow E_K(M[i] \oplus \text{Offset}) \oplus \text{Offset}$. Now let Offset $\leftarrow$ Offset $\oplus L(\mathsf{ntz}(m))$. Let $Y[m] \leftarrow E_K(\text{len}(M[m]) \oplus L(-1) \oplus \text{Offset})$. Let $C[m] \leftarrow M[m]$ xored with the first $|M[m]|$ bits of $Y[m]$. Let Checksum $\leftarrow$ Checksum $\oplus Y[m] \oplus C[m]\,0^*$. Let T be the first τ bits of $E_K(\text{Checksum} \oplus \text{Offset})$. The ciphertext is $\mathcal{C} = C[1] \cdots C[m-1]C[m]\ T$. It must be communicated along with the nonce N.

Decryption. To decrypt ciphertext $\mathcal{C} \in \{0,1\}^*$ using key K and nonce $N \in \{0,1\}^n$, obtaining a plaintext $M \in \{0,1\}^*$ or an indication Invalid, do the following. If $|\mathcal{C}| < \tau$ then return Invalid (the ciphertext has been rejected). Otherwise let C be the first $|\mathcal{C}| - \tau$ bits of $\mathcal{C}$ and let T be the remaining τ bits. Let $m \leftarrow \lceil |C|/n \rceil$. If $m = 0$ then let $m \leftarrow 1$. Let $C[1], \ldots, C[m]$ be strings such that $C[1] \cdots C[m] = C$ and $|C[i]| = n$ for $i \in [1..m-1]$. Let Offset $\leftarrow E_K(N \oplus L)$. Let Checksum $\leftarrow 0^n$. For $i \leftarrow 1$ to $m-1$, do the following: let Offset $\leftarrow$ Offset $\oplus L(\mathsf{ntz}(i))$; let $M[i] \leftarrow E_K^{-1}(C[i] \oplus \text{Offset}) \oplus \text{Offset}$; let Checksum $\leftarrow$ Checksum$\oplus M[i]$. Now let Offset $\leftarrow$ Offset $\oplus L(\mathsf{ntz}(m))$. Let $Y[m] \leftarrow E_K(\text{len}(C[m]) \oplus L(-1) \oplus \text{Offset})$. Let $M[m] \leftarrow C[m]$ xored with the first $|C[m]|$ bits of $Y[m]$. Let Checksum $\leftarrow$ Checksum $\oplus Y[m] \oplus C[m]\,0^*$. Let T' be the first τ bits of $E_K(\text{Checksum} \oplus \text{Offset})$. If $T \neq T'$ then return Invalid (the ciphertext has been rejected). Otherwise, the plaintext is $M = M[1] \cdots M[m-1]M[m]$.

4. DISCUSSION

OCB has been designed to have a variety of desirable properties. We mention some of those properties here.

Arbitrary-length messages and minimal ciphertext expansion. One of the key characteristics of OCB is that any string $M \in \{0,1\}^*$ can be encrypted, and doing this yields a ciphertext $\mathcal{C}$ having $|M| + \tau$ bits. That is, the length of the "ciphertext core"—the portion $C = C[1] \cdots C[m]$ of the ciphertext that excludes the tag—is the same as the length of the message M. This is better, by up to n bits, than what one gets with conventional padding. But remember that we do not regard the nonce as part of the ciphertext. Including it, the amount of information that needs to be sent to the receiver is $|M| + \tau + \eta$ bits, where η bits are used to communicate the nonce N. The value of η could be anything in $[0..n]$, depending on the application.

Single block-cipher key. OCB makes use of just one block-cipher key, K. While $L = E_K(0^n)$ functions rather like a key and would normally be computed at key-setup time, and while standard key-separation techniques can always be used to obtain many keys from one, the point is that, in OCB, all block-cipher invocations use the one key K. Thus only one block-cipher key needs to be setup, saving on storage space and key-setup time.

Weak nonce requirements. We believe that modes of operation that require a random IV are often misused. As an example, consider CBC mode, where $C[i] = E_K(M[i] \oplus C[i-1])$ and $C[0] = \mathrm{IV}$. Many standards and many books (e.g., Schneier, *Applied Cryptography*, 2nd edition, p. 194]) suggest that the IV may be a fixed value, a counter, a timestamp, or the last block of ciphertext from the previous message. But if it is any of these things one certainly will not achieve any of the standard definitions of privacy [Bellare et al. 1997; Goldwasser and Micali 1984].

It is sometimes suggested that a mode which needs a random IV is preferable to one that needs a nonce: it is said that *state* is needed for a nonce, but not for making random bits. We find this argument wrong. First, a random value of sufficient length can always be used as a nonce, but a nonce cannot be used as a random value. Second, the manner in which systems provide "random" IVs is invariably stateful anyway: unpredictable bits are too expensive to harvest for each IV, so one does this rarely, using state to generate pseudorandom bits from unpredictable bits harvested before. Third, the way to generate pseudorandom bits needs to use cryptography, so the prevalence of non-cryptographic pseudorandom number generators routinely results in implementation errors. Fourth, nonce-based schemes facilitate simple replay-detection. Finally, nonces can be communicated using fewer bits than random values.

On-line. OCB encryption is *on-line*: one can output a stream of ciphertext bits as a stream of plaintext bits arrive, the output stream having constant latency and the transformation using constant memory. When one receives an indication that the plaintext is over, the final chunk of ciphertext is output. One need not know the length of the plaintext in advance of processing it. This allows the efficient

encryption of strings whose representation uses a special character (e.g., a zero-byte) to indicate the string's end. An incremental interface (in the style popular for cryptographic hash functions) could be used to support this functionality.

OCB decryption is likewise on-line, but with an important difference: one can produce a stream of plaintext bits as the stream of ciphertext bits comes in, but when the ciphertext stream is finished one may need to "cancel" the plaintext stream that has issued (having found the ciphertext to be invalid). In such a case, nothing about the ciphertext (like what was the canceled plaintext) should be adversarially available beyond an indication of its invalidity. In any authenticated-encryption scheme, decryption can be on-line only to this extent.

Significance of being efficient. Shaving off a few block-cipher calls or a few bytes of ciphertext may not seem important. But often one is dealing with short messages; for example, roughly a third of the messages on the Internet backbone are 43 bytes. If one is encrypting messages of such short lengths, one should be careful about message expansion and extra computational work since, by percentage, the inefficiencies can be large.

The argument has been made that making a major effort to save a factor of two in computational efficiency is marginal in the first place: "Moore's law" will soon deliver such an improvement anyway, by way of faster hardware. We are not persuaded. Along with processors getting faster, security has become increasingly an issue, and low-power and embedded processors have become more prevalent. The result is a need to cryptographically process more and more data, and often by "dumb" execution vehicles. Hardware advances have changed our understanding of what efficiency entails but, to date, hardware advances have not made cryptographic efficiency less important.

Endian neutrality. In contrast to a scheme based on mod-p arithmetic (for p a prime just less than 2^n) or mod-2^n arithmetic, there is almost no endian-favoritism implicit in the definition of OCB. (The exception is that, because of our use of standard mathematical conventions, the left shift used for forming $L(i+1)$ from $L(i)$ is more convenient under a big-endian convention, as is the right shift used for forming $L(-1) = L \cdot \mathtt{x}^{-1}$ from L.)

Optional pre-processing. Implementations can choose how many $L(i)$ values to precompute. Since only one block-cipher call is needed to compute all of the $L(i)$ values, plus a shift and a conditional xor for each value, it is feasible to do no preprocessing: OCB is appropriate even when each session is a single, short message.

Provable security. Provable security has become a popular goal for practical protocols. This is because it provides the best way to gain assurance that a cryptographic scheme does what it is should. For a scheme that enjoys provable security one does not need to consider attacks on the scheme, since successful ones imply successful attacks on some simpler object.

When we say that "OCB is provably secure" we are asserting the existence of two theorems. One says that if an adversary A could do a good job at forging ci-

phertexts with OCB$[E, \tau]$ (the adversary does this much more than a $2^{-\tau}$ fraction of the time) then there would be an adversary B that does a good job at distinguishing $(E_K(\cdot), E_K^{-1}(\cdot))$, for a random key K, from $(\pi(\cdot), \pi^{-1}(\cdot))$, for a random permutation $\pi \in \mathrm{Perm}(n)$. The other theorem says that if an adversary A could do a good job at distinguishing OCB$[E, \tau]$-encrypted messages from random strings, then there would be an adversary B that does a good job at distinguishing $E_K(\cdot)$, for a random key K, from $\pi(\cdot)$, for a random permutation $\pi \in \mathrm{Perm}(n)$. Theorems of this sort are called *reductions.* In cryptography, provable security means giving reductions (along with the associated definitions).

Provable security begins with Goldwasser and Micali [Goldwasser and Micali 1984]. The style of provable security that we use here—where the primitive is a block cipher, the scheme is a mode of operation, and the analysis is concrete (no asymptotics)—is the approach of Bellare and Rogaway [Bellare et al. 1997; Bellare et al. 1995; Bellare et al. 2000].

It is not enough to know that there is a provable-security result; one should also understand the definitions and the bounds. We have already sketched the definitions. When we speak of the bounds we are addressing "how effective is the adversary B in terms of the efficacy of adversary A" (where A and B are as above). For OCB, the bounds can be roughly summarized as follows. An adversary can always forge with probability $1/2^\tau$. Beyond this, the maximal added advantage is at most $\sigma^2/2^n$, where σ is the total number of blocks the adversary sees. The privacy bound likewise degrades as $\sigma^2/2^n$. The conclusion is that one is safe using OCB as long as the underlying block cipher is secure and σ is small compared to $2^{n/2}$. This is the same security degradation one observes for CBC encryption and in the bound for the CBC MAC [Bellare et al. 1997; Bellare et al. 2000]. This kind of security loss was the main motivation for choosing a block length for AES of $n = 128$ bits.

Comparison with Jutla's bound. More precisely, but still ignoring lower-order terms, our privacy and authenticity bounds are $1.5\,\sigma^2/2^n$, while Jutla's authenticity bound is insignificantly worse at $2\,\sigma^2/2^n$ and his privacy bound, rescaled to $[0, 1]$, is insignificantly worse at $3\,\sigma^2/2^n$ [Jutla 2001b]. Magnifying the latter difference is that the privacy results assume different definitions. Jutla adopts the find-then-guess definition of privacy [Bellare et al. 1997; Goldwasser and Micali 1984], while we use an indistinguishability-from-random-bits definition. The former captures an adversary's inability to distinguish ciphertexts for a pair of adversarially-selected, equal-length plaintexts. The latter captures an adversary's inability to distinguish a ciphertext from a random string of the same length. Indistinguishability-from-random-bits implies find-then-guess security, and by a tight reduction, but find-then-guess secure does not imply indistinguishability-from-random-bits. Still, Jutla's scheme probably satisfies the stronger definition, and with similar bounds.

Numerical example to illustrate provable security. Let's do a small example to illustrate what, concretely, the provable-security results mean. Suppose that we are using OCB-AES, tags are 64 bits (or longer), and the adversary has access to at most 2^{40} bytes of chosen ciphertext before the key is changed (by a new key-exchange, for example). Then, if AES has its anticipated security, the

adversary's chance to produce a valid forged message (after studying its 1 terabyte of acquired data) is around $1.5(2^{40-4})^2/2^{128}+2^{-64} < 2^{-55}$. In general, the $1.5\sigma^2/2^n$ formula provides guidance in how long a key can be safely used. The considerations are application-dependent, but one needs to change keys well before $2^{n/2}$ blocks have been encrypted.

Simplicity. Simplicity has been a central design goal. Some of OCB's characteristics that contribute to simplicity are: (1) Short and full final-message-blocks are handled uniformly, not splitting into separate cases. (2) Only the simplest form of padding is used: append a minimal number of 0-bits to make a string whose length is a multiple of n. This method is computationally fastest and helps avoid a proliferation of cases in the analysis. (3) Only one algebraic structure is used throughout the algorithm: the finite field $\mathrm{GF}(2^n)$. (4) In forming the sequence of offsets, Gray-code coefficients are taken monotonically, starting at 1 and stopping at m. One never goes back to an earlier offset or forms more offsets than there are blocks.

Not fixing how the nonce is communicated. We do not specify how the nonce is chosen or communicated. Formally, it is not part of the ciphertext (though the receiving party needs it to decrypt). In many contexts, there is already a natural value to use as a nonce (e.g., a sequence number already present in a protocol flow, or implicit because the parties are communicating over a reliable channel). Even when a protocol is designed from scratch, the number of bits needed to communicate the nonce will vary. In some applications, 32 or even 8 bits is enough. For example, one might have reason to believe that there are at most 2^{32} messages that will flow during the connection, or one may communicate only the lowest 8 bits of a sequence number, counting on the receiver to anticipate the high-order bits.

Not fixing the tag length. The number of bits necessary for the tag vary according to the application. In a context where the adversary obtains something quite valuable from a successful forgery, one may wish to choose a tag length of 80 bits or more. In contexts such as authenticating a video stream, where an adversary would have to forge many frames to have a major impact on the image, an 8-bit tag may be appropriate. With no universally correct value to choose, it is best to leave this parameter unspecified.

Short tags seem to be more appropriate for OCB than for some other MACs, particularly Carter-Wegman MACs. Many Carter-Wegman MACs have the property that if you can forge one message with probability δ then you can forge an arbitrary set of (all correct) messages with probability δ. This does not appear to be true for OCB, though we have not investigated formalizing or proving such properties.

Forming R using a block-cipher call. During our work we discovered that there are methods for authenticated-encryption that encrypt M using $\lceil |M|/n \rceil + 1$ block-cipher calls, as opposed to our $\lceil |M|/n \rceil + 2$ calls. Shai Halevi has also made this finding [Halevi 2001]. However, the methods we know to shave off a block-cipher call either require an unpredictable IV instead of a nonce, or they add conceptual

and computational complexity to compute the initial offset R by non-cryptographic means (e.g., using a finite-field multiplication of the nonce and a key variant).

Avoiding mod-2^n addition. Our earlier designs included a scheme based on modular 2^n addition ("addition" for the remainder of this paragraph). Basing an authenticated-encryption scheme on addition is an interesting idea due to Gligor and Donescu [Gligor and Donescu 2002]. Compared to our GF(2^n)-based approach ("xor" for the remainder of this paragraph), an addition-based scheme might seem simpler. But the use of addition (where $n \geq 128$) has several disadvantages: (1) The bit-asymmetry of the addition operator implies that the resulting scheme will have a bias towards big-endian architectures or little-endian architectures; there will be no way to achieve an endian-neutral scheme. The AES algorithm was constructed to be endian-neutral and we wanted OCB-AES to inherit this attribute. (2) Addition is unpleasant for implementations using high-level languages, where one normally has no access to the add-with-carry instruction the machine may have. (3) Addition needs more chip area than xor. (4) Some hardware platforms perform addition more slowly than xor. Experiments on a Pentium 3 revealed that repeated add-with-carry instructions were slower than repeated xors. (5) The concrete security bound appears to be worse with addition than xor (though still not bad). The degradation would seem to be $\Theta(\lg \bar{m})$, where $\bar{m}$ is the maximal message length. We eventually came to believe that the simplicity benefit of addition was not worth it and maybe not quite real.

Definition of the checksum. An initially odd-looking aspect of OCB's definition is the definition of Checksum $= M[1] \oplus \cdots M[m-1] \oplus C[m]\,0^* \oplus Y[m]$. In Jutla's scheme, where one assumes that all messages are a positive multiple of the block length, the checksum is the simpler-looking $M[1] \oplus \cdots M[m-1] \oplus M[m]$. We comment that these two definitions are identical in the case that $|M[m]| = n$. What is more, the definition Checksum $= M[1] \oplus \cdots M[m-1] \oplus M[m]\,0^*$ turns out to be the wrong way to generalize the Checksum to allow for short-final-block messages; in particular, the scheme using that checksum is easily attacked.

5. THEOREMS

5.1 Security Definitions

The first provable-security treatment of symmetric encryption is due to Bellare, Desai, Jokipii and Rogaway [Bellare et al. 1997]. A provable-security treatment of authenticated encryption was initiated by [Katz and Yung 2000b; Bellare and Rogaway 2000] and continued by [Bellare and Namprempre 2000]. We build on all these works but our definitions involve some novel elements.

OCB uses a nonce, and we wish to give the adversary every possible advantage (more than is available in real life) by allowing it to choose this nonce (though we forbid the adversary from choosing the same nonce twice). This leads us to introduce a new primitive, that we call a nonce-using symmetric encryption scheme, and that is syntactically different from a standard symmetric encryption scheme. We also introduce a new and particularly strong notion of privacy called indistinguishability from random strings.

Syntax. We extend the syntax of an encryption scheme as given in [Bellare et al. 1997]. A (nonce-using, symmetric) encryption scheme is a triple $\Pi = (\mathcal{K}, \mathcal{E}, \mathcal{D})$ and an associated number n (the nonce length). Here $\mathcal{K}$ is a finite set and $\mathcal{E}$ and $\mathcal{D}$ are deterministic algorithms. Encryption algorithm $\mathcal{E}$ takes $K \in \mathcal{K}$, $N \in \{0,1\}^n$, and $M \in \{0,1\}^*$, and returns a string $\mathcal{C} \leftarrow \mathcal{E}_K(N, M)$. Decryption algorithm $\mathcal{D}$ takes $K \in \mathcal{K}$, $N \in \{0,1\}^n$, and $\mathcal{C} \in \{0,1\}^*$, and returns $\mathcal{D}_K(N, M)$, which is either a string $M \in \{0,1\}^*$ or the distinguished symbol Invalid. If $\mathcal{C} \leftarrow \mathcal{E}_K(N, M)$ then $\mathcal{D}_K(N, \mathcal{C}) = M$.

Privacy. We give a particularly strong definition of privacy, one asserting indistinguishability from random strings. This notion is easily seen to imply (the natural extension to nonce-using schemes of) more standard definitions [Bellare et al. 1997], and by tight reductions. Consider an adversary A that has one of two types of oracles: a "real" encryption oracle or a "fake" encryption oracle. A real encryption oracle, $\mathcal{E}_K(\cdot,\cdot)$, takes as input N, M and returns $\mathcal{C} \leftarrow \mathcal{E}_K(N, M)$. Assume that $|\mathcal{C}| = \ell(|M|)$ depends only on $|M|$. A fake encryption oracle, $\$(\cdot,\cdot)$, takes as input N, M and returns a random string $\mathcal{C} \xleftarrow{\$} \{0,1\}^{\ell(|M|)}$. Given adversary A and encryption scheme $\Pi = (\mathcal{K}, \mathcal{E}, \mathcal{D})$, define $\mathbf{Adv}^{\mathrm{priv}}_{\Pi}(A) = \Pr[K \xleftarrow{\$} \mathcal{K} : \ A^{\mathcal{E}_K(\cdot,\cdot)} = 1] - \Pr[K \xleftarrow{\$} \mathcal{K} : \ A^{\$(\cdot,\cdot)} = 1]$.

An adversary A is *nonce-respecting* if it never repeats a nonce: if A asks its oracle a query (N, M) it will never subsequently ask its oracle a query (N, M'), regardless of its coins (if any) and regardless of oracle responses. All adversaries are assumed to be nonce-respecting.

Authenticity. We extend the notion of integrity of ciphertexts of [Bellare and Namprempre 2000; Bellare and Rogaway 2000; Katz and Yung 2000b]. Fix an encryption scheme $\Pi = (\mathcal{K}, \mathcal{E}, \mathcal{D})$ and run an adversary A with an oracle $\mathcal{E}_K(\cdot,\cdot)$ for some key K. Adversary A *forges* (in this run) if A is nonce-respecting, A outputs $(N, \mathcal{C})$ where $\mathcal{D}_K(N, \mathcal{C}) \neq$ Invalid, and A made no earlier query (N, M) which resulted in a response $\mathcal{C}$. Let $\mathbf{Adv}^{\mathrm{auth}}_{\Pi}(A) = \Pr[K \xleftarrow{\$} \mathcal{K} : \ A^{\mathcal{E}_K(\cdot,\cdot)} \text{ forges }]$. We stress that the nonce used in the forgery attempt may coincide with a nonce used in one of the adversary's queries.

Block ciphers and PRFs. A *function family* from n-bits to n-bits is a map $E : \mathcal{K} \times \{0,1\}^n \to \{0,1\}^n$ where $\mathcal{K}$ is a finite set of strings. It is a *block cipher* if each $E_K(\cdot) = E(K, \cdot)$ is a permutation. Let $\mathrm{Rand}(n)$ denote the set of all functions from $\{0,1\}^n$ to $\{0,1\}^n$ and let $\mathrm{Perm}(n)$ denote the set of all permutations from $\{0,1\}^n$ to $\{0,1\}^n$. These sets can be regarded as function families by imagining that each member is specified by a string. For $\pi \in \mathrm{Perm}(n)$, let $\pi^{-1}(Y)$ be the unique string X such that $\pi(X) = Y$. Let

$$\mathbf{Adv}^{\mathrm{prf}}_{E}(A) \;=\; \Pr[K \xleftarrow{\$} \mathcal{K} : \ A^{E_K(\cdot)} = 1] - \Pr[\rho \xleftarrow{\$} \mathrm{Rand}(n) : \ A^{\rho(\cdot)} = 1]$$

$$\mathbf{Adv}^{\mathrm{prp}}_{E}(A) \;=\; \Pr[K \xleftarrow{\$} \mathcal{K} : \ A^{E_K(\cdot)} = 1] - \Pr[\pi \xleftarrow{\$} \mathrm{Perm}(n) : \ A^{\pi(\cdot)} = 1]$$

$$\mathbf{Adv}^{\mathrm{sprp}}_{E}(A) \;=\; \Pr[K \xleftarrow{\$} \mathcal{K} : \ A^{E_K(\cdot), E_K^{-1}(\cdot)} = 1] -$$

$$\Pr[\pi \xleftarrow{\$} \mathrm{Perm}(n) : \ A^{\pi(\cdot),\pi^{-1}(\cdot)} = 1]$$

be defined for a block cipher E and adversary A.

5.2 Theorem Statements

We give information-theoretic bounds on the authenticity and the privacy of OCB. Proofs are in Appendix 8.

THEOREM 5.1. [**Authenticity**] *Fix OCB parameters n and τ. Let A be an adversary that asks q queries and then makes its forgery attempt. Suppose the q queries have aggregate length of σ blocks, and the adversary's forgery attempt has at most c blocks. Let $\bar{\sigma} = \sigma + 2q + 5c + 11$. Then*

$$\mathbf{Adv}^{\mathrm{auth}}_{\mathrm{OCB}[\mathrm{Perm}(n),\tau]}(A) \ \leq \ \frac{1.5\,\bar{\sigma}^2}{2^n} + \frac{1}{2^\tau} \qquad \diamondsuit$$

The aggregate length of queries $M_1, \ldots, M_q$ means the number $\sigma = \sum_{r=1}^{q} \|M_r\|_n$.

It is standard to pass to a complexity-theoretic analog of Theorem 5.1, but in doing this one will need access to an E^{-1} oracle in order to verify a forgery attempt, which translates into needing the strong PRP assumption. One gets the following. Fix OCB parameters n and τ, and a block cipher $E\colon \mathcal{K} \times \{0,1\}^n \to \{0,1\}^n$. Let A be an adversary that asks q queries and then makes its forgery attempt. Suppose the q queries have aggregate length of σ blocks, and the adversary's forgery attempt has at most c blocks. Let $\bar{\sigma} = \sigma + 2q + 5c + 11$. Let $\delta = \mathbf{Adv}^{\mathrm{auth}}_{\mathrm{OCB}[E,\tau]}(A) - 1.5\,\bar{\sigma}^2/2^n - 1/2^\tau$. Then there is an adversary B for attacking block cipher E that achieves advantage $\mathbf{Adv}^{\mathrm{sprp}}_E(B) \geq \delta$. Adversary B asks at most $q' = \sigma + 2q + c + 3$ oracle queries and has a running time which is equal to A's running time plus the time to compute E or E^{-1} at q' points plus additional time which is $\alpha n \bar{\sigma}$, where the constant α depends only on details of the model of computation.

The privacy of OCB is given by the following result.

THEOREM 5.2. [**Privacy**] *Fix OCB parameters n and τ. Let A be an adversary that asks q queries, these having aggregate length of σ blocks. Let $\bar{\sigma} = \sigma + 2q + 3$. Then*

$$\mathbf{Adv}^{\mathrm{priv}}_{\mathrm{OCB}[\mathrm{Perm}(n),\tau]}(A) \ \leq \ \frac{1.5\,\bar{\sigma}^2}{2^n} \qquad \diamondsuit$$

As before, it is standard to pass to a complexity-theoretic analog of Theorem 5.2. Fix OCB parameters n and τ, and a block cipher $E\colon \mathcal{K} \times \{0,1\}^n \to \{0,1\}^n$. Let A be an adversary that asks q queries, these having aggregate length of σ blocks. Let $\bar{\sigma} = \sigma + 2q + 3$. Let $\delta = \mathbf{Adv}^{\mathrm{auth}}_{\mathrm{OCB}[E,\tau]}(A) - 1.5\,\bar{\sigma}^2/2^n$. Then there is an adversary B for attacking block cipher E that achieves advantage $\mathbf{Adv}^{\mathrm{prp}}_E(B) \geq \delta$. Adversary B asks at most $q' = \sigma + 2q + 1$ oracle queries and has a running time which is equal to A's running time plus the time to compute E at q' points plus additional time which is $\alpha n \bar{\sigma}$, where the constant α depends only on details of the model of computation.

Algorithm	64 B	256 B	1 KB	4 KB
OCB encrypt	24.7 (395)	18.5 (296)	**16.9** (271)	16.7 (267)
ECB encrypt	15.1 (241)	15.0 (239)	**14.9** (238)	14.9 (238)
CBC encrypt	15.9 (254)	15.9 (254)	**15.9** (255)	15.9 (256)
CBC mac	19.2 (307)	16.3 (261)	**15.5** (248)	15.3 (246)

Fig. 2. Performance results from Lipmaa [Lipmaa 2001], in cycles per byte (cycles per 16-byte block) on a Pentium III. The block cipher is AES128. Code is written in assembly.

6. PERFORMANCE

Abstract accounting. OCB uses $\lceil |M|/n \rceil + 2$ block-cipher calls to encrypt a nonempty message M. (The empty string takes three block-cipher calls.)

We compare this with CBC encryption and CBC encryption plus a CBC MAC. Namely, "basic" CBC encryption, where one assumes a random IV and a message which is a multiple of the block length, uses $|M|/n$ block-cipher calls. (A more fair comparison uses some padding regime and sets $\mathrm{IV} = E_{K'}(N)$, so both schemes use a nonce IV). If one combines basic CBC encryption with a CBC MAC, say MACing the ciphertext (including the IV), then CBC-encryption will use a number of block-cipher calls as just discussed, while the CBC MAC will use at least $\lceil |M|/n \rceil + 1$ block-cipher calls (possibly more, depending on padding conventions and what is done to ensure security across messages of varying lengths). So the total number of calls for CBC encryption with a CBC MAC will be at least $2\lceil |M|/n \rceil + 1$, and typically a bit more.

As with any mode, OCB has overhead beyond the block-cipher calls. Per block, this overhead is about four n-bit xor operations, plus associated logic. The work for this associated logic will vary according to whether or not one precomputed $L(i)$-values and many additional details.

Though some or all of the needed $L(i)$-values are likely to be precomputed, computing all of them "on the fly" is not inefficient. Starting with 0^n we form successive offsets by xoring the previous offset with L, $2 \cdot L$, L, $4 \cdot L$, L, $2 \cdot L$, L, $8 \cdot L$, and so forth. So half the time we use L itself; a quarter of the time we use $2 \cdot L$; one eighth of the time we use $4 \cdot L$; and so forth. Thus the expected number of times to multiply by $\mathtt{x}$ in order to compute an offset is at most $\sum_{i=1}^{\infty} i/2^{i+1} = 1$. Each $a \cdot \mathtt{x}$ instruction requires an n-bit shift and a conditional 32-bit xor. Said differently, for any $m > 0$, the total number of $a \cdot \mathtt{x}$ operations needed to compute $\gamma_1 \cdot L$, $\gamma_2 \cdot L$, $\ldots$, $\gamma_m \cdot L$ is $\sum_{i=1}^{m} \mathsf{ntz}(i)$, which is less than m.

Experimental results. In Table 2 we report, with permission, some experimental results by Helger Lipmaa [Lipmaa 2001]. On a Pentium III, in optimized assembly, Lipmaa implemented OCB encryption, ECB encryption, CBC encryption, and the CBC MAC. The last three modes were implemented in their "raw" forms, where one does no padding and assumes that the message acted on is a positive multiple of the block length. For CBC encryption, the IV is fixed. The underlying block cipher is AES128.

Focusing on messages of 1 KByte, OCB incurs about 6.4% overhead compared to CBC encryption, and the algorithm takes about 54% of the time of a CBC encryp-

tion + CBC MAC. Lipmaa points out that overhead is so low that, in his experiments, an assembly AES128 with a C-code CBC-wrapper is slightly slower than the same AES128 with an assembly OCB-wrapper. Lipmaa's (size-unoptimized) code is 7.2 KBytes, which includes unrolling AES128 (2.2 KBytes) three times.

Some aspects of the experiments above are unfavorable to OCB, making the performance estimates conservative. In particular, the "raw" CBC MAC needs to be modified to correctly handle length-variability; when combined with CBC encryption, the CBC MAC should be taken over the full ciphertext, including the nonce, which would add an extra block-cipher call; and an extra block-cipher call would normally be performed by CBC to correctly compute the IV from a nonce.

The results above are for a serial execution environment. In settings with plenty of registers and multiple instruction pipes, OCB, properly implemented, will be faster than CBC.

7. AFTERWARDS

After the initial publication of OCB many individuals pointed out that often times when one is trying to encrypt a message with authenticity there is additional data, such as a message header, that should be authenticated but *not* encrypted. The associated data should be bound to the ciphertext but should not increase its length. This problem of *authenticated-encryption with associated-data* has been formally defined in [Rogaway 2002], and an extension to OCB has been given there that allows the binding-in of arbitrary associated data while retaining OCB's efficiency characteristics.

Richard Schroeppel has described to us a nice implementation trick [Schroeppel 2001] that obviates the utility of the Gray-code ordering used in OCB. The method is to precompute the sequence $\hat{L}(0), \hat{L}(1), \hat{L}(2), \hat{L}(3), \cdots = L, 3L, 7L, 15L, \cdots$ instead of $L(0), L(1), L(2), L(3), \cdots = L, 2L, 4L, 8L, \cdots$. Then notice that values of the sequence $L, 2L, 3L, 4L, 5L, \cdots$ can be efficiently enumerated using the observation that $iL = (i-1)L \oplus \hat{L}(\mathsf{ntz}(i))$ for any $i \geq 2$.

OCB has become an optional algorithm in a draft IEEE 802.11 standard for the security of wireless LANs. There is also a patent pending on OCB. See the first author's web page for current information.

8. PROOFS

8.1 Structure of the Proofs

Our proof of Theorem 5.1 is based on three lemmas. The first, the *structure lemma*, relates the authenticity of OCB to three functions: the M-collision probability, denoted $\mathrm{Mcoll}_n(\cdot)$, the MM-collision probability, denoted $\mathrm{MMcoll}_n(\cdot,\cdot)$, and the CM-collision probability, denoted $\mathrm{CMcoll}_n(\cdot,\cdot)$. We state this lemma and then explain its purpose and the functions to which it refers.

Lemma 1. **[Structure lemma]** *Fix OCB parameters n and τ. Let A be an adversary that asks q queries and then makes its forgery attempt. Suppose the q queries have aggregate length of σ blocks, and the adversary's forgery attempt has at most c blocks. Let $\bar{\sigma} = \sigma + 2q + 5c + 11$. Let $\mathrm{Mcoll}_n(\cdot)$, $\mathrm{MMcoll}_n(\cdot,\cdot)$ and*

$\mathrm{CMcoll}_n(\cdot,\cdot)$ *be the M-, MM-, and CM-collision probabilities. Then*

$$\mathbf{Adv}^{\mathrm{auth}}_{\mathrm{OCB}[\mathrm{Perm}(n),\tau]}(A) \le \max_{\substack{m_1,\ldots,m_q \\ \sum m_i=\sigma \\ m_i\ge 1}} \left\{ \sum_{r\in[1..q]} \mathrm{Mcoll}_n(m_r) + \right.$$

$$\left. \sum_{1\le r<s\le q} \mathrm{MMcoll}_n(m_r,m_s) + \sum_{r\in[1..q]} \mathrm{CMcoll}_n(c,m_r) \right\} + \frac{\bar{\sigma}^2}{2^{n+1}} + \frac{1}{2^\tau} \qquad \diamondsuit$$

What this lemma does. The structure lemma provides a recipe for measuring the maximal forging probability of an adversary attacking the authenticity of OCB: compute the M-, MM- and CM- collision probabilities, and then put them together using the formula of the lemma.

Informally, $\mathrm{Mcoll}_n(m)$ measures the probability of running into trouble when the adversary asks a single query of the specified length. Trouble means the occurrence of any collision in the associated block-cipher-input values. This includes the "special" input 0^n (used to define $L = E_K(0^n)$ and $N \oplus L$ (used to define $R = E_K(N \oplus L)$). Informally, $\mathrm{MMcoll}_n(m,\bar{m})$ measures the probability of running into trouble when the adversary asks some two oracle queries of the specified lengths. Trouble means that a block-cipher input associated to the first message coincides with a block-cipher input associated to the second message. Informally, $\mathrm{CMcoll}_n(c,\bar{m})$ measures the probability of running into trouble when the adversary tries to forge some particular ciphertext C of the specified block length c, there having been an earlier query of some particular message M of the specified block length m, it receiving some particular response. This time trouble basically refers to the final block-cipher input for the forgery attempt, $X[c+1]$, coinciding with some earlier block-cipher input.

The structure lemma simplifies the analysis of OCB in two ways. First, it allows one to excise adaptivity as a concern. Dealing with adaptivity is a major complicating factor in proofs of this type. Second, it allows one to concentrate on what happens to fixed pairs of messages. It is easier to think about what happens with two messages than what is happening with all $q+1$ of them.

The M- and MM-collision probability. We next define the M-collision probability and the MM-collision probability, and then state our upper bound on these functions.

Definition 8.1. **[M- and MM-collision probabilities]** *Fix $n > 0$ and let $M = M[0]\cdots M[m+1]$ and $\bar{M} = \bar{M}[0]\cdots\bar{M}[\bar{m}+1]$ be strings of at least $2n$ bits, where each $M[i]$ and $\bar{M}[j]$ has n bits. Choose $L, R, \bar{R} \xleftarrow{\$} \{0,1\}^n$ and then associate to M*

and $\bar{M}$ *the points*

$$
\begin{array}{lll}
X[-1] & = 0^n & \\
 & & \\
X[0] & = M[0] \oplus L & \bar{X}[0] \quad = \bar{M}[0] \oplus L \\
X[1] & = M[1] \oplus \gamma_1 \cdot L \oplus R & \bar{X}[1] \quad = \bar{M}[1] \oplus \gamma_1 \cdot L \oplus \bar{R} \\
X[2] & = M[2] \oplus \gamma_2 \cdot L \oplus R & \bar{X}[2] \quad = \bar{M}[2] \oplus \gamma_2 \cdot L \oplus \bar{R} \\
\vdots & & \vdots \\
X[m-1] & = M[m-1] \oplus \gamma_{m-1} \cdot L \oplus R & \bar{X}[\bar{m}-1] \quad = \bar{M}[\bar{m}-1] \oplus \gamma_{\bar{m}-1} \cdot L \oplus \bar{R} \\
X[m] & = M[m] \oplus (\gamma_m \oplus \mathit{huge}) \cdot L \oplus R & \bar{X}[\bar{m}] \quad = \bar{M}[\bar{m}] \oplus (\gamma_{\bar{m}} \oplus \mathit{huge}) \cdot L \oplus \bar{R} \\
X[m+1] & = M[m+1] \oplus \gamma_{\bar{m}} \cdot L \oplus R & \bar{X}[\bar{m}+1] \quad = \bar{M}[\bar{m}+1] \oplus \gamma_m \cdot L \oplus \bar{R}
\end{array}
$$

and the multisets

$$
\begin{aligned}
\mathcal{X}_0 &= \{\, X[-1],\ X[0],\ X[1],\ \ldots,\ X[m],\ X[m+1] \,\} \\
\mathcal{X} &= \{\, X[0],\ X[1],\ \ldots,\ X[m],\ X[m+1] \,\} \\
\bar{\mathcal{X}} &= \{\, \bar{X}[0],\ \bar{X}[1],\ \ldots,\ \bar{X}[\bar{m}],\ \bar{X}[\bar{m}+1] \,\}
\end{aligned}
$$

Let $\mathrm{Mcoll}_n(M)$ *denote the probability that some string is repeated in the multiset* $\mathcal{X}_0$*, and let* $\mathrm{MMcoll}_n(M, \bar{M})$ *denote the probability that some element occurs in both* $\mathcal{X}$ *and* $\bar{\mathcal{X}}$*. When* m *and* $\bar{m}$ *are numbers, let* $\mathrm{Mcoll}_n(m)$ *denote the maximal value of* $\mathrm{Mcoll}_n(M)$ *over all strings* $M \in (\{0,1\}^n)^{m+2}$ *and let* $\mathrm{MMcoll}_n(m, \bar{m})$ *denote the maximal value of* $\mathrm{Mcoll}_n(M, \bar{M})$ *over all* $M \in (\{0,1\}^n)^{m+2}$ *and* $\bar{M} \in (\{0,1\}^n)^{\bar{m}+2}$ *such that* $M[0] \neq \bar{M}[0]$*.*

Think of $M[0]$ as a synonym for the nonce N, think of $M[m]$ as a generalization of $\mathrm{len}(M[m])$ (where the adversary can effectively control $M[m]$ as opposed to $\mathrm{len}(M[m])$ to influence $X[m]$), and think of $M[m+1]$ as a synonym for Checksum, which we likewise let the adversary control. One similarly understands $\bar{M}[0]$, $\bar{M}[\bar{m}]$, and $\bar{M}[\bar{m}+1]$. The needed bound is as follows.

Lemma 2. **[Bound on the M- and MM-collision probability]**

$$
\mathrm{Mcoll}_n(m) \;\leq\; \binom{m+3}{2} \cdot \frac{1}{2^n} \qquad \text{and} \qquad \mathrm{MMcoll}_n(m, \bar{m}) \;\leq\; \frac{(m+2)(\bar{m}+2)}{2^n}
$$

The CM-collision probability. The CM-collision probability is defined in Figure 3. The following lemma tells us how large it can possibly be.

Lemma 3. **[Bound on the CM-collision probability]** Assume $c, \bar{m} \leq 2^{n-2}$. Then

$$
\mathrm{CMcoll}_n(c, \bar{m}) \;\leq\; \frac{2c + 3\bar{m} + 9}{2^n}
$$

Concluding the authenticity theorem. To prove Theorem 5.1, combine Lemmas 1, 2, and 3. Let $\Pi = \mathrm{OCB}[\mathrm{Perm}(n), \tau]$. Given the aggregate block length σ and the bound c on the length of the forgery attempt, one must bound the maximum

```
bad ← false;   for all x ∈ {0,1}^n do π(x) ← undefined
L ←$ {0,1}^n;   π(0^n) ← L

X̄[0] ← N̄ ⊕ L;   Ȳ[0] ← R̄ ←$ {0,1}^n
for i ← 1 to m̄ do Z̄(i) ← γ_i · L ⊕ R̄
for i ← 1 to m̄ − 1 do { X̄[i] ← M̄[i] ⊕ Z̄[i];   Ȳ[i] ← C̄[i] ⊕ Z̄[i] }
X̄[m̄] ← len(M̄[m̄]) ⊕ huge · L ⊕ Z̄[m̄] ;   Ȳ(m̄) ← C̄[m̄] 0* ⊕ M̄[m̄] 0*
Checksum′ ← M̄[1] ⊕ ··· ⊕ M̄[m̄ − 1] ⊕ C̄[m̄] 0* ⊕ Ȳ[m̄]
X̄[m̄ + 1] ← Checksum′ ⊕ Z̄[m̄]
for i ← 0 to m̄ + 1 do π(X̄[i]) ← Ȳ[i]

X[0] ← N ⊕ L
if N ≠ N̄ and X[0] ∈ Domain(π) then bad ← true
if N = N̄ then R ← R̄ else R ←$ {0,1}^n
π(X[0]) ← R
for i ← 1 to c do Z[i] ← γ_i · L ⊕ R
for i ← 1 to c − 1 do {
        Y[i] ← C[i] ⊕ Z[i]
        if Y[i] ∈ Range(π) then X[i] ← π^{−1}(Y[i]) else X[i] ←$ {0,1}^n
        π(X[i]) ← Y[i];   M[i] ← X[i] ⊕ Z[i] }
X[c] ← len(C[c]) ⊕ huge · L ⊕ Z[c]
if X[c] ∈ Domain(π) then Y[c] ← π(X[c]) else Y[c] ←$ {0,1}^n
π(X[c]) ← Y[c]
Checksum ← M[1] ⊕ ··· ⊕ M[c − 1] ⊕ C[c] 0* ⊕ Y[c]
X[c + 1] ← Checksum ⊕ Z[c]
if X[c + 1] ∈ Domain(π) then bad ← true
```

Fig. 3. **Defining the CM-collision probability.** The function $\mathrm{CMcoll}_n(\bar{N}, \bar{M}, \bar{C},\ N, C)$ is defined as the probability that *bad* gets set to `true` when executing this game. The value $\mathrm{CMcoll}_n(c, \bar{m})$ is the maximal value of $\mathrm{CMcoll}_n(\bar{N}, \bar{M}, \bar{C},\ N, C)$ over all $\bar{m}$-block $\bar{M}$ and $\bar{C}$, and all c-block C such that $N \neq \bar{N}$ or $C \neq \bar{C}$.

possible value of

$$\mathbf{Adv}^{\mathrm{auth}}_{\Pi}(A) \;\leq\; \max_{\substack{m_1,\ldots,m_q \\ \sum m_i = \sigma \\ m_i \geq 1}} \left\{ \sum_{r\in[1..q]} \mathrm{Mcoll}_n(m_r) + \sum_{1\leq r<s\leq q} \mathrm{MMcoll}_n(m_r, m_s) + \sum_{r\in[1..q]} \mathrm{CMcoll}_n(c, m_r) \right\} + \frac{\bar{\sigma}^2}{2^{n+1}} + \frac{1}{2^\tau}$$

$$\leq \max_{\substack{m_1,\ldots,m_q \\ \sum m_i = \sigma \\ m_i \geq 0}} \left\{ \sum_{r\in[1..q]} \frac{(m_r+3)^2}{2^{n+1}} + \sum_{1\leq r<s\leq q} \frac{(m_r+2)(m_s+2)}{2^n} + \sum_{r\in[1..q]} \left(\frac{2c+3m_r+9}{2^n} \right) \right\} + \frac{(\sigma+2q+5c+11)^2}{2^{n+1}} + \frac{1}{2^\tau}$$

One can bound the first sum by letting $m_1 = \sigma$ and letting the remaining $m_i = 0$; one can bound the second sum by letting each $m_i = \sigma/q$; and one can bound the third sum by letting $m_1 = \sigma$ and letting the remaining $m_i = 0$. These choices can be justified by the technique of Lagrange multipliers. This gives

$$\begin{aligned}
\mathbf{Adv}^{\mathrm{auth}}_{\Pi}(A) \;\le\; & \frac{0.5(\sigma+3)^2+4.5q}{2^n} + \frac{0.5q^2(\sigma/q+2)^2}{2^n} + \frac{2c+3\sigma+9+q(2c+9)}{2^n} + \\
& \qquad\qquad \frac{0.5(\sigma+2q+5c+11)^2}{2^n} + \frac{1}{2^\tau} \\
\le\; & \frac{0.5(\sigma+3)^2+4.5q+0.5(\sigma+2q)^2+2c+3\sigma+9+2cq+9q+0.5(\sigma+2q+5c+11)^2}{2^n} + \frac{1}{2^\tau} \\
\le\; & \frac{0.5(\sigma+3)^2+0.5(\sigma+2q)^2+0.5(\sigma+2q+5c+11)^2+(3\sigma+2cq+2c+13.5q+9)}{2^n} + \frac{1}{2^\tau} \\
\le\; & \frac{1.5\,(\sigma+2q+5c+11)^2}{2^n} + \frac{1}{2^\tau} \\
\le\; & \frac{1.5\,\bar{\sigma}^2}{2^n} + \frac{1}{2^\tau}
\end{aligned}$$

The fourth inequality can be justified by checking that $0.5(\sigma+3+(2q+5c+8))^2 - 0.5(\sigma+3)^2)$ already exceeds $3\sigma+2cq+2c+13.5q+9$. This completes the proof.

Privacy. Privacy is obtained rather easily en route to proving authenticity. The is because of the following result, which closely follows the first half of the proof of the structure lemma.

Lemma 4. [**Privacy lemma**] *Fix OCB block length n and tag length τ, and let $\Pi = \mathrm{OCB}[\mathrm{Perm}(n), \tau]$. Let A be an adversary that asks q queries, these having aggregate block length of σ blocks. Let $\mathrm{Mcoll}_n(\cdot)$ and $\mathrm{MMcoll}_n(\cdot,\cdot)$ be the M- and MM-collision probabilities. Then*

$$\mathbf{Adv}^{\mathrm{priv}}_{\Pi}(A) \;\le\; \frac{(\sigma+2q+1)^2}{2^{n+1}} + \max_{\substack{m_1,\ldots,m_q \\ \sum m_i=\sigma \\ m_i\ge 1}} \left\{ \sum_{r\in[1..q]} \mathrm{Mcoll}_n(m_r) + \sum_{1\le r<s\le q} \mathrm{MMcoll}_n(m_r,m_s) \right\}$$

Combining Lemmas 2 and 4 gives Theorem 5.2. Namely,

$$\mathbf{Adv}^{\mathrm{priv}}_{\Pi}(A) \;\le\; \frac{(\sigma+2q+1)^2}{2^{n+1}} + \max_{\substack{m_1,\ldots,m_q \\ \sum m_i=\sigma \\ m_i\ge 0}} \left\{ \sum_{r\in[1..q]} \frac{(m_r+3)^2}{2\cdot 2^n} \right\} + \max_{\substack{m_1,\ldots,m_q \\ \sum m_i=\sigma \\ m_i\ge 0}} \left\{ \sum_{1\le r<s\le q} \frac{(m_r+2)(m_s+2)}{2^n} \right\}$$

and we bound the two sums exactly as before, giving

$$\mathbf{Adv}^{\mathrm{priv}}_{\Pi}(A) \;\le\; \frac{0.5(\sigma+2q+1)^2}{2^n} + \frac{0.5(\sigma+3)^2+4.5q}{2^n} + \frac{0.5q^2(\sigma/q+2)^2}{2^n}$$

$$\leq \frac{0.5(\sigma+2q+1)^2+0.5(\sigma+3)^2+4.5q+0.5(\sigma+2q)^2+4.5q}{2^n}$$

$$\leq \frac{1.5\,(\sigma+2q+3)^2}{2^n}$$

$$\leq \frac{1.5\,\bar{\sigma}^2}{2^n}$$

The third inequality can be justified by noting that $0.5(\sigma+3+2q)^2-0.5(\sigma+3)^2$ exceeds $4.5q$.

8.2 Proof of the Structure Lemma (Lemma 1)

Let A be a (computationally unbounded) adversary that attempts to violate the authenticity of $\Pi = \mathrm{OCB}[\mathrm{Perm}(n), \tau]$. Without loss of generality, A is deterministic. The adversary is given an oracle for $\mathrm{OCB.Enc}_\pi(\cdot,\cdot)$. We must bound the probability that A, after adaptively using this oracle q times, on messages with aggregate length σ blocks, produces a properly forged ciphertext having at most c blocks. This forgery probability is denoted $\mathbf{Adv}^{\mathrm{auth}}_{\Pi}(A)$.

Game A. One can conceive of A interacting with $\mathrm{OCB.Enc}_\pi(\cdot,\cdot)$ and then producing a forgery attempt as A playing a certain game, game A, as defined in Figures 4 and 5. Rather than choose $\pi \xleftarrow{\$} \mathrm{Perm}(n)$ all at once, this game defines the values of $\pi(x)$ point-by-point, as needed. We use the notation $\mathrm{Domain}(\pi)$ for the set of values $x \in \{0,1\}^n$ such that $\pi(x) \neq$ `undefined`. By $\overline{\mathrm{Domain}}(\pi)$ we mean $\{0,1\}^n \setminus \mathrm{Domain}(\pi)$. Similarly, $\mathrm{Range}(\pi)$ is the set of $y \in \{0,1\}^n$ such that there exists an $x \in \{0,1\}^n$ for which $\pi(x) = y$, and $\overline{\mathrm{Range}}(\pi) = \{0,1\}^n \setminus \mathrm{Range}(\pi)$.

An inspection of game A makes clear that it supplies to A a perfect simulation of $\mathrm{OCB.Enc}_\pi(\cdot,\cdot)$. Game A simulates OCB in a somewhat unusual way, not only defining π point-by-point, but, when a value $\pi(x)$ is needed, for some new x, we get this value, in most cases, not by choosing $y \xleftarrow{\$} \overline{\mathrm{Range}}(\pi)$, as would seem natural, but by choosing $y \xleftarrow{\$} \{0,1\}^n$, setting $\pi(x)$ to y if y is not already in the range of π, and "changing our minds," setting $\pi(x) \xleftarrow{\$} \overline{\mathrm{Range}}(\pi)$, otherwise. In the latter case, a flag *bad* is set to `true`. The flag *bad* is also set to `true` when the adversary successfully forges. Consequently, upperbounding the probability that *bad* gets set to `true` in game A serves to upperbound the adversary's forging probability.

Game A′. We begin by making a couple of quite trivial changes to game A. First, instead of setting $C[m] = M[m] \oplus Y[m]$ (in line 24 of game A), we set $C[m] = M[m]\,0^* \oplus Y[m]$, instead. That is, we imagine returning the "full" final-ciphertext-block instead of the truncated final-ciphertext-block. Clearly the extra bits given to the adversary can not make worse an optimal adversary's chance of successful forgery. Second, instead of returning (in line 30 of game A) a tag T which is the first τ bits of $Y[m+1]$, we return the full tag, $Y[m+1]$. Once again, the extra bits provided to the adversary can only improve an optimal adversary's chance of success. Let game A′ denote this new, "easier" game. We will bound the probability that *bad* gets set to `true` in game A′.

Initialization:
01 $bad \leftarrow$ `false`; **for all** $x \in \{0,1\}^n$ **do** $\pi(x) \leftarrow$ `undefined`
02 $L \xleftarrow{\$} \{0,1\}^n$; $\pi(0^n) \leftarrow L$

When A **asks query** (N, M): *//q such queries will be asked*
10 Partition M into blocks $M[1] \cdots M[m]$
11 $X[0] \leftarrow N \oplus L$; $Y[0] \xleftarrow{\$} \{0,1\}^n$
12 **if** $X[0] \in \mathrm{Domain}(\pi)$ **then** { $bad \leftarrow$ `true`; $Y[0] \leftarrow \pi(X[0])$ } **else**
13 **if** $Y[0] \in \mathrm{Range}(\pi)$ **then** { $bad \leftarrow$ `true`; $Y[0] \xleftarrow{\$} \overline{\mathrm{Range}}(\pi)$ }
14 $\pi(X[0]) \leftarrow Y[0]$

15 **for** $i \leftarrow 1$ **to** m **do** $Z[i] \leftarrow \gamma_i \cdot L \oplus Y[0]$
16 **for** $i \leftarrow 1$ **to** $m-1$ **do** {
17 $X[i] \leftarrow M[i] \oplus Z[i]$; $Y[i] \xleftarrow{\$} \{0,1\}^n$
18 **if** $X[i] \in \mathrm{Domain}(\pi)$ **then** { $bad \leftarrow$ `true`; $Y[i] \leftarrow \pi(X[i])$ } **else**
19 **if** $Y[i] \in \mathrm{Range}(\pi)$ **then** { $bad \leftarrow$ `true`; $Y[i] \xleftarrow{\$} \overline{\mathrm{Range}}(\pi)$ }
20 $\pi(X[i]) \leftarrow Y[i]$; $C[i] \leftarrow Y[i] \oplus Z[i]$ }

21 $X[m] \leftarrow \mathrm{len}(M[m]) \oplus \mathit{huge} \cdot L \oplus Z[m]$; $Y[m] \xleftarrow{\$} \{0,1\}^n$
22 **if** $X[m] \in \mathrm{Domain}(\pi)$ **then** { $bad \leftarrow$ `true`; $Y[m] \leftarrow \pi(X[m])$ } **else**
23 **if** $Y[m] \in \mathrm{Range}(\pi)$ **then** { $bad \leftarrow$ `true`; $Y[m] \xleftarrow{\$} \overline{\mathrm{Range}}(\pi)$ }
24 $\pi(X[m]) \leftarrow Y[m]$; $C[m] \leftarrow M[m] \oplus Y[m]$

25 $\mathrm{Checksum} \leftarrow M[1] \oplus \cdots \oplus M[m-1] \oplus C[m]\,0^* \oplus Y[m]$
26 $X[m+1] \leftarrow \mathrm{Checksum} \oplus Z[m]$; $Y[m+1] \xleftarrow{\$} \{0,1\}^n$
27 **if** $X[m+1] \in \mathrm{Domain}(\pi)$ **then** { $bad \leftarrow$ `true`; $Y[m+1] \leftarrow \pi(X[m+1])$ } **else**
28 **if** $Y[m+1] \in \mathrm{Range}(\pi)$ **then** { $bad \leftarrow$ `true`; $Y[m+1] \xleftarrow{\$} \overline{\mathrm{Range}}(\pi)$ }
29 $\pi(X[m+1]) \leftarrow Y[m+1]$; $T \leftarrow Y[m+1]$ [first τ bits]
30 **return** $\mathcal{C} \leftarrow C[1] \cdots C[m]\,T$

Fig. 4. **Game A, part 1.** This game provides adversary A a perfect simulation of $\mathrm{OCB}[\mathrm{Perm}(n), \tau]$.

Game B. Next we eliminate from game A′ the statement which immediately follows *bad* being set to `true` in each of lines 12, 13, 18, 19, 22, 23, 27, 28. The **else** statements are also eliminated. This new game, game B, is shown in Figure 6. This new game is different from game A′, and an adversary A having queries answered according to game B will not be seeing the same view as one whose queries are answered according to A′. Still, game B has been constructed so that it behaves identically to game A′ until the flag *bad* is set to `true`. Only at that point do the two games diverge. As a consequence, regardless of the behavior of A, the probability that *bad* will get set to `true` when A plays game B is identical to the probability that *bad* gets set to `true` when A plays game A′. Now we are interested in upperbounding the probability of forgery in game A, which we do by upperbounding the probability that *bad* gets set to `true` in game A′, which is just the probability that *bad* gets set to `true` in game B.

Note that we are not claiming that the probability of the adversary forging in game B (meaning that *bad* gets set to `true` at line 65 of game B) is the same as

When A **makes forgery attempt** $(N, \mathcal{C})$:
50 Partition $\mathcal{C}$ into $C[1] \cdots C[c]\, T$
51 $X[0] \leftarrow N \oplus L$; **if** $X[0] \in \mathrm{Domain}(\pi)$ **then** $Y[0] \leftarrow \pi(X[0])$ **else** $Y[0] \xleftarrow{\$} \overline{\mathrm{Range}}(\pi)$
52 $\pi(X[0]) \leftarrow Y[0]$
53 **for** $i \leftarrow 1$ **to** c **do** $Z[i] \leftarrow \gamma_i \cdot L \oplus Y[0]$
54 **for** $i \leftarrow 1$ **to** $c-1$ **do** {
55 $\quad Y[i] \leftarrow C[i] \oplus Z[i]$
56 $\quad$ **if** $Y[i] \in \mathrm{Range}(\pi)$ **then** $X[i] \leftarrow \pi^{-1}(Y[i])$ **else** $X[i] \xleftarrow{\$} \overline{\mathrm{Domain}}(\pi)$
57 $\quad \pi(X[i]) \leftarrow Y[i]$; $\quad M[i] \leftarrow X[i] \oplus Z[i]$ }

58 $X[c] \leftarrow \mathrm{len}(C[c]) \oplus \mathit{huge} \cdot L \oplus Z[c]$
59 **if** $X[c] \in \mathrm{Domain}(\pi)$ **then** $Y[c] \leftarrow \pi(X[c])$ **else** $Y[c] \xleftarrow{\$} \overline{\mathrm{Range}}(\pi)$
60 $\pi(X[c]) \leftarrow Y[c]$
61 $\mathrm{Checksum} \leftarrow M[1] \oplus \cdots \oplus M[c-1] \oplus C[c]\, 0^* \oplus Y[c]$
62 $X[c+1] \leftarrow \mathrm{Checksum} \oplus Z[c]$
63 **if** $X[c+1] \in \mathrm{Domain}(\pi)$ **then** $Y[c+1] \leftarrow \pi(X[c])$ **else** $Y[c+1] \xleftarrow{\$} \overline{\mathrm{Range}}(\pi)$
64 $T' \leftarrow Y[c+1]$ [first τ bits]
65 **if** $T = T'$ **then** $\mathit{bad} \leftarrow$ `true`

Fig. 5. **Games A, A′ B, B′, and C, part 2.**

the probability of the adversary forging in A′ (meaning that *bad* gets set to `true` in the last line of that game). Claims of this sort are tempting to make, but they are untrue.

Bounding Y-collisions in Game B. We next bound the probability that *bad* will be set to `true` in any of lines 13, 19, 23, or 28 of game B. In each of these lines, a random n-bit string was just chosen and then it is tested for membership in the growing set $\mathrm{Range}(\pi)$. In the course of game B the size $\mathrm{Range}(\pi)$ starts off at 0 and then grows one element at a time until it reaches a final size of $\sigma + 2q + 1$ elements. Therefore the probability that, in growing $\mathrm{Range}(\pi)$, there is a repetition as we add in random points is at most $(1+2+\cdots+\sigma+2q)/2^n \le (\sigma+2q+1)^2/2^{n+1}$. We note this for future reference:

$$\Pr[A \text{ causes } \mathit{bad} \text{ to be set in any of lines 13, 19, 23 or 28 of game B}] \le \frac{(\sigma+2q+1)^2}{2^{n+1}}. \tag{1}$$

Having bounded the probability that *bad* will be set in the four indicated lines, we may imagine eliminating these four lines, forming a new game, game B′. The probability that *bad* is set in game B is at most the computed bound more than than the probability that *bad* is set in game B′. Thus we may continue the analysis using game B′ as long as we compensate the final bound by adding in the term given by Equation (1).

Game C. In game B′, consider the distribution on strings returned to the adversary in response to a query (N, M), where $m = \|M\|_n$. The adversary learns $\mathcal{C} = C[1] \cdots C[m-1]C[m]\, Y[m+1]$. Since each block of this string is a uniform

Initialization:
01 $bad \leftarrow$ `false`; **for all** $x \in \{0,1\}^n$ **do** $\pi(x) \leftarrow$ `undefined`
02 $L \xleftarrow{\$} \{0,1\}^n$; $\pi(0^n) \leftarrow L$

When A **asks query** (N, M): *//q such queries will be asked*
10 Partition M into blocks $M[1] \cdots M[m]$
11 $X[0] \leftarrow N \oplus L$; $Y[0] \xleftarrow{\$} \{0,1\}^n$
12 **if** $X[0] \in \mathrm{Domain}(\pi)$ **then** $bad \leftarrow$ `true`
13 **if** $Y[0] \in \mathrm{Range}(\pi)$ **then** $bad \leftarrow$ `true`
14 $\pi(X[0]) \leftarrow Y[0]$
15 **for** $i \leftarrow 1$ **to** m **do** $Z[i] \leftarrow \gamma_i \cdot L \oplus Y[0]$
16 **for** $i \leftarrow 1$ **to** $m-1$ **do** {
17 $X[i] \leftarrow M[i] \oplus Z[i]$; $Y[i] \xleftarrow{\$} \{0,1\}^n$
18 **if** $X[i] \in \mathrm{Domain}(\pi)$ **then** $bad \leftarrow$ `true`
19 **if** $Y[i] \in \mathrm{Range}(\pi)$ **then** $bad \leftarrow$ `true`
20 $\pi(X[i]) \leftarrow Y[i]$; $C[i] \leftarrow Y[i] \oplus Z[i]$ }
21 $X[m] \leftarrow \mathrm{len}(M[m]) \oplus \mathit{huge} \cdot L \oplus Z[m]$; $Y[m] \xleftarrow{\$} \{0,1\}^n$
22 **if** $X[m] \in \mathrm{Domain}(\pi)$ **then** $bad \leftarrow$ `true`
23 **if** $Y[m] \in \mathrm{Range}(\pi)$ **then** $bad \leftarrow$ `true`
24 $\pi(X[m]) \leftarrow Y[m]$; $C[m] \leftarrow M[m]\,0^* \oplus Y[m]$
25 $\mathrm{Checksum} \leftarrow M[1] \oplus \cdots \oplus M[m-1] \oplus C[m]\,0^* \oplus Y[m]$
26 $X[m+1] \leftarrow \mathrm{Checksum} \oplus Z[m]$; $Y[m+1] \xleftarrow{\$} \{0,1\}^n$
27 **if** $X[m+1] \in \mathrm{Domain}(\pi)$ **then** $bad \leftarrow$ `true`
28 **if** $Y[m+1] \in \mathrm{Range}(\pi)$ **then** $bad \leftarrow$ `true`
29 $\pi(X[m+1]) \leftarrow Y[m+1]$
30 **return** $\mathcal{C} \leftarrow C[1] \cdots C[m]\, Y[m+1]$

Fig. 6. **Game B, part 1.**

random value xor'ed with some other, independent value, we have that $\mathcal{C}$ is uniformly distributed and independent of the query M, apart from its length. As a consequence, when a query of N, M is made, where M has m blocks, we can return a random answer $\mathcal{C}$ (of $nm+n$ bits) and do no more at that time. Later, when the adversary is done making its q queries, we can set the remaining random values, make the associated assignments to π, and set the flag *bad*, as appropriate. This is what has been done in Game C of Figure 7. From the adversary's point of view, game B′ and game C are identical. Furthermore, the probability that *bad* gets set to `true` is identical in the two games.

Game D. We have reduced the problem of upperbounding the forging probability to the problem of upperbounding the probability that *bad* gets set to `true` in game C. This probability is over the coins used in line 11 of game C (which defines the $\mathcal{C}_r$-values) and over the additional coins used subsequently in the program. We must show that, over this sequence of coins (remember that the adversary is deterministic) the flag *bad* is rarely set.

We will show something stronger: that even if one fixes all of the coins used in line 11 (the $\mathcal{C}_r$-values) and takes the probability over just the remaining coins, still the probability that *bad* gets set to `true` is small. The virtue of this change is that

When A **asks its** r**-th query,** $(N_r,\ M_r)$: *//r will range from* 1 *to* q
10 Partition M_r into blocks $M_r[1] \cdots M_r[m_r]$
11 $C_r[1], \ldots, C_r[m_r],\ Y_r[m+1] \xleftarrow{\$} \{0,1\}^n$
12 **return** $\mathcal{C}_r \leftarrow C_r[1] \cdots C_r[m_r]\ Y_r[m_r+1]$

When A **is done making oracle queries:**
20 $bad \leftarrow$ `false`; **for all** $x \in \{0,1\}^n$ **do** $\pi(x) \leftarrow$ `undefined`
21 $L \xleftarrow{\$} \{0,1\}^n$; $\pi(0^n) \leftarrow L$

30 **for** $r \leftarrow 1$ **to** q **do** {
31 $X_r[0] \leftarrow N_r \oplus L$; $Y_r[0] \xleftarrow{\$} \{0,1\}^n$
32 **for** $i \leftarrow 1$ **to** m_r **do** $Z_r[i] \leftarrow \gamma_i \cdot L \oplus Y_r[0]$
33 **for** $i \leftarrow 1$ **to** $m_r - 1$ **do** { $X_r[i] \leftarrow M_r[i] \oplus Z_r[i]$; $Y_r[i] \leftarrow C_r[i] \oplus Z_r[i]$ }
34 $X_r[m_r] \leftarrow \mathrm{len}(M[m_r]) \oplus \mathit{huge} \cdot L \oplus Z_r[m_r]$; $Y_r[m_r] \leftarrow C_r[m_r] \oplus M_r[m_r]\,0^*$
35 $\mathrm{Checksum}_r \leftarrow M_r[1] \oplus \cdots \oplus M_r[m_r - 1] \oplus C_r[m_r]\,0^* \oplus Y_r[m_r]$
36 $X_r[m_r+1] \leftarrow \mathrm{Checksum}_r \oplus Z_r[m_r]$ }

37 $\mathcal{X} \leftarrow (X_1[0], X_1[1], \ldots, X_1[m_1+1],\ \ldots,\ X_q[0], X_q[1], \ldots, X_q[m_q+1])$
38 $\mathcal{Y} \leftarrow (Y_1[0], Y_1[1], \ldots, Y_1[m_1+1],\ \ldots,\ Y_q[0], Y_q[1], \ldots, Y_q[m_q+1])$
39 **if** some string is repeated in $\mathcal{X} \cup \{0^n\}$ **then** $bad \leftarrow$ `true`
40 **for** $i \leftarrow 1$ **to** $|\mathcal{X}|$ **do** $\pi(\mathcal{X}[i]) \leftarrow \mathcal{Y}[i]$

Fig. 7. **Game C, part 1.** This game provides adversary A with the same view as game B, and sets *bad* with the same probability. But it defers some random choices.

it effectively eliminates the q interactive queries from the game. Namely, since the adversary A is deterministic and each response $\mathcal{C}_r$ has been fixed, the adversary can be imagined to "know" all of the queries $N_1, M_1,\ \ldots,\ N_q, M_q$ that it would ask and all of the answers $\mathcal{C}_1, \ldots, \mathcal{C}_q$ that it would receive. All the adversary has left to do is to output the forgery attempt $(N, C\ T)$. This value too is now predetermined, as our adversary is deterministic. So the adversary is effectively gone, and we are left to claim that for any $N_1, M_1, \ldots, N_q, M_q,\ \mathcal{C}_1, \ldots, \mathcal{C}_q,\ N, C, T$, the flag *bad* will rarely be set if we run game C starting at line 20. The new game is called game D. It depends on $N_1, M_1, \ldots, N_q, M_q,\ \mathcal{C}_1, \ldots, \mathcal{C}_q,\ N, C, T$, which are now just constants. The constants are not quite arbitrary: the N_r-values are still required to be distinct. The lengths of $M_1, \ldots, M_q$ are $m_1, \ldots, m_q$ blocks. The length of C is c blocks.

THE Mcoll_n AND MMcoll_n TERMS. At this point we make the observation that *bad* will be set to `true` in line 40 of game D if and only if either

- There is some $r \in [1..q]$ such that there is a repetition in the multiset

$$\{0^n,\ X_r[0],\ X_r[1],\ \ldots, X_r[m_r]\}$$

- There is some pair $r, s \in [1..q]$, where $r < s$, such that $\{X_r[0],\ \ldots\ X_r[m_r+1]\}$ has some a point in common with $\{X_s[0],\ \ldots\ X_s[m_s+1]\}$.

20 $bad \leftarrow$ `false`; **for all** $x \in \{0,1\}^n$ **do** $\pi(x) \leftarrow$ `undefined`
21 $L \xleftarrow{\$} \{0,1\}^n$; $\pi(0^n) \leftarrow L$

30 **for** $r \leftarrow 1$ **to** q **do** {
31 $X_r[0] \leftarrow N_r \oplus L$; $Y_r[0] \xleftarrow{\$} \{0,1\}^n$
32 **for** $i \leftarrow 1$ **to** m_r **do** $Z_r[i] \leftarrow \gamma_i \cdot L \oplus Y_r[0]$
33 **for** $i \leftarrow 1$ **to** $m_r - 1$ **do** { $X_r[i] \leftarrow M_r[i] \oplus Z_r[i]$; $Y_r[i] \leftarrow C_r[i] \oplus Z_r[i]$ }
34 $X_r[m_r] \leftarrow \mathrm{len}(M[m_r]) \oplus \mathit{huge} \cdot L \oplus Z_r[m_r]$; $Y_r[m_r] \leftarrow C_r[m_r] \oplus M_r[m_r]\,0^*$
35 $\mathrm{Checksum}_r \leftarrow M_r[1] \oplus \cdots \oplus M_r[m_r - 1] \oplus C_r[m_r]\,0^* \oplus Y_r[m_r]$
36 $X_r[m_r + 1] \leftarrow \mathrm{Checksum}_r \oplus Z_r[m_r]$ }
37 $\mathcal{X} \leftarrow (X_1[0], X_1[1], \ldots, X_1[m_1 + 1], \ \ldots, \ X_q[0], X_q[1], \ldots, X_q[m_q + 1])$
38 $\mathcal{Y} \leftarrow (Y_1[0], Y_1[1], \ldots, Y_1[m_1 + 1], \ \ldots, \ Y_q[0], Y_q[1], \ldots, Y_q[m_q + 1])$
39 **for** $i \leftarrow 1$ **to** $|\mathcal{X}|$ **do** $\pi(\mathcal{X}[i]) \leftarrow \mathcal{Y}[i]$
40 **if** some string is repeated in $\mathcal{X} \cup \{0^n\}$ **then** $bad \leftarrow$ `true`

50 $X[0] \leftarrow N \oplus L$; **if** $X[0] \in \mathrm{Domain}(\pi)$ **then** $Y[0] \leftarrow \pi(X[0])$ **else** $Y[0] \xleftarrow{\$} \overline{\mathrm{Range}}(\pi)$
51 $\pi(X[0]) \leftarrow Y[0]$
52 **for** $i \leftarrow 1$ **to** c **do** $Z[i] \leftarrow \gamma_i \cdot L \oplus Y[0]$
53 **for** $i \leftarrow 1$ **to** $c - 1$ **do** {
54 $Y[i] \leftarrow C[i] \oplus Z[i]$
55 **if** $Y[i] \in \mathrm{Range}(\pi)$ **then** $X[i] \leftarrow \pi^{-1}(Y[i])$ **else** $X[i] \xleftarrow{\$} \overline{\mathrm{Domain}}(\pi)$
56 $\pi(X[i]) \leftarrow Y[i]$; $M[i] \leftarrow X[i] \oplus Z[i]$ }
57 $X[c] \leftarrow \mathrm{len}(C[c]) \oplus \mathit{huge} \cdot L \oplus Z[c]$
58 **if** $X[c] \in \mathrm{Domain}(\pi)$ **then** $Y[c] \leftarrow \pi(X[c])$ **else** $Y[c] \xleftarrow{\$} \overline{\mathrm{Range}}(\pi)$
59 $\pi(X[c]) \leftarrow Y[c]$
60 $\mathrm{Checksum} \leftarrow M[1] \oplus \cdots \oplus M[c-1] \oplus C[c]\,0^* \oplus Y[c]$
61 $X[c+1] \leftarrow \mathrm{Checksum} \oplus Z[c]$
62 **if** $X[c+1] \in \mathrm{Domain}(\pi)$ **then** $Y[c+1] \leftarrow \pi(X[c])$ **else** $Y[c+1] \xleftarrow{\$} \overline{\mathrm{Range}}(\pi)$
63 $T' \leftarrow Y[c+1]$ [first τ bits]
64 **if** $T = T'$ **then** $bad \leftarrow$ `true`

Fig. 8. **Game D.** This game depends on $N_1, \ldots, N_q$, $M_1, \ldots, M_q$, $C_1, \ldots, C_q$, $Y_1[m_1 + 1]$, …, $Y_q[m_q + 1]$, N, $C = C[1] \cdots C[c]$ and T.

The probability of this event is at most

$$\sum_{r \in [1..q]} \mathrm{Mcoll}_n(m_r) + \sum_{1 \le r < s \le q} \mathrm{MMcoll}_n(m_r, m_s) \tag{2}$$

by our definition of Mcoll_n and MMcoll_n. Therefore the probability that *bad* is set to `true` in line 40 of Game D is at most the expression above. We are left now to focus on the probability that *bad* gets set to `true` in line 64 of Game D (Figures 8 and 5).

Game E. We modify the second half of game D (lines 20–39 are unchanged). First, we simplify lines 50, 55 and 58, and 62 by choosing a random value in $\{0,1\}^n$ as opposed to a value in the co-range, co-domain, co-range, and co-range of π, respectively. By similar reasoning to that used before, this new game may decrease

```
50  X[0] ← N ⊕ L
51  if N ≠ N_r for any r and X[0] ∈ Domain(π) then bad ← true
52  if N = N_r for some r then Y[0] ← Y_r[0] else Y[0] ←$ {0,1}^n
53  π(X[0]) ← Y[0]
54  for i ← 1 to c do Z[i] ← γ_i · L ⊕ Y[0]
55  for i ← 1 to c − 1 do {
56        Y[i] ← C[i] ⊕ Z[i]
57        if Y[i] ∈ Range(π) then X[i] ← π^{−1}(Y[i]) else X[i] ←$ {0,1}^n
58        π(X[i]) ← Y[i];   M[i] ← X[i] ⊕ Z[i] }
59  X[c] ← len(C[c]) ⊕ huge · L ⊕ Z[c]
60  if X[c] ∈ Domain(π) then Y[c] ← π(X[c]) else Y[c] ←$ {0,1}^n
61  π(X[c]) ← Y[c]
62  Checksum ← M[1] ⊕ ··· ⊕ M[c − 1] ⊕ C[c] 0* ⊕ Y[c]
63  X[c + 1] ← Checksum ⊕ Z[c]
64  if X[c + 1] ∈ Domain(π) then bad ← true
```

Fig. 9. **Game E, part 2.** The first half of this game is lines 20–39 of Game D.

the probability that *bad* gets set to `true`, but by an amount that is at most

$$\frac{(c+2)(\sigma+2q+c+3)}{2^n}$$

Second, we modify the game so as to "give up" (set *bad*) if the condition of line 62 is satisfied. In doing this, we may again decrease the probability that *bad* will be set to `true`. But the decrease is at most $1/2^\tau$ since, when the **else** clause of the new line 62 is executed (that is, $Y[m+1] \xleftarrow{\$} \{0,1\}^n$), T will equal T' with probability exactly $1/2^\tau$. Finally, we modify the game to give up (set *bad*) whenever $N \notin \{N_1, \ldots, N_q\}$ but $X[0] = N \oplus L$ is already in Domain(π) when this is checked at line 50. The new game is called game E and it is shown in Figure 9. We note for future reference:

$$\begin{aligned}&\Pr[\textit{bad} \text{ gets set in game D}]\\ &\quad\le \Pr[\textit{bad} \text{ gets set in game E}] + \frac{(c+2)(\sigma+2q+c+3)^2}{2^n} + \frac{1}{2^\tau} \qquad (3)\end{aligned}$$

Game F. We now examine game E and relate it to a final game, F. If *bad* is set to `true` in game E the reason is either that $X[0] = N \oplus L$ was found to be in the domain of π even though N is a new nonce, or else $X[c+1]$ was found to be in the domain of π when this was checked. In the latter case, how did $X[c+1]$ come to be in the domain of π? At least one of the following must be true:

- $X[c+1] = 0^n$. (The value 0^n was added to the domain of π at line 21.)
- For some $r \in [1..q]$, for some $j \in [0..m_r+1]$, $X[c+1] = X_r[j]$. (These values were added to the domain of π at line 39.)
- For some $i \in [0..c]$, $X[c+1] = X[i]$. (These values were added to the domain of π at lines 53, 57, and 61).

When *bad* is set to `true` we will assign responsibility for this event to exactly one index $r \in [1..q]$. We say that the *responsible index* is r where:

- If N is a new nonce and $X[0] \in \text{Domain}(\pi)$ at line 51, then the responsible index is the least $r \in [1..q]$ such that $X_r[j] = X[0]$ for some j. Otherwise,
- If $X[c+1] = 0^n$, then the responsible index is $r = 1$. Otherwise,
- If there is an $r \in [1..q]$ such that, for some $j \in [0..m_r + 1]$, $X[c+1] = X_r[j]$, then the responsible index is the least such value r. Otherwise,
- The responsible index is $r = 1$. (This last case can happen when $X[c+1] = X[i]$ for some $i \in [0..c]$.)

Partition the coins used in the running of game E into: the coins s_0 used in the initialization step (line 21); the coins $s_1, \ldots, s_q$ used for processing message $M_1, \ldots, M_q$, respectively (line 31); and the coins s used to process the forgery attempt C (lines 52, 57, and 60). Suppose we eliminate the **for** statement at line 30, and execute lines 31–36 for some specific value of r. Call this game E_r. We make the crucial observation that if *bad* is set to `true` in game E using coins $(s_0, s_1, \ldots, s_q, s)$ then *bad* will *still* be set to `true` in game E_r using coins (s_0, s_r, s) when the responsible index is r. This follows from our definition of the responsible index. The only observation that is needed is that when $X[c+1] = X[i]$ for some $i \in [0..c]$, then, considering the least such i, if $X[i]$ was selected by assigning to it an already-selected $X_s[j]$-value, then the third case in the definition of the responsible index will result in the selection of an index r that forces *bad* to `true`.

By what we have said, one can bound the probability that *bad* gets set to `true` in game E by summing the probabilities that *bad* gets set to `true` in game E_r, where $r \in [1..q]$. Game E_r is precisely the game that was used to define the CMcoll_n; in particular, the probability that *bad* is set in E_r is $\mathrm{CMcoll}_n(c, m_r)$. We conclude that the probability that *bad* is set to `true` in game E_r is at most $\mathrm{CMcoll}_n(c, m_r)$. Thus the probability that *bad* gets set to `true` in game E is at most

$$\sum_{r=1}^{q} \mathrm{CMcoll}_n(c, m_r) \tag{4}$$

Summing Equations (1), (2), (3) and (4) gives that the adversary's chance of forgery is at most

$$\sum_{r \in [1..q]} \mathrm{Mcoll}_n(m_r) + \sum_{1 \le r < s \le q} \mathrm{MMcoll}_n(m_r, m_s) + \sum_{r=1}^{q} \mathrm{CMcoll}_n(c, m_r) + \frac{(\sigma + 2q + 1)^2 + 2(c+2)(\sigma + 2q + c + 3)}{2^{n+1}} + \frac{1}{2^\tau}$$

Using that $(\sigma + \Delta)^2 - \sigma^2 \ge 2\sigma\Delta$ and $(\sigma + \Delta)^2 - \sigma^2 \ge \Delta^2$, we can increase σ by a small amount in order to compensate for the lower-order terms and clean up the expression. Namely, increasing σ by $2q + 1$ is enough to take care of the first addend, while increasing σ by $c + 2$ plus $2(c + 2)$ plus $\sqrt{2}(c+3)$ is enough to take care of the second addend. So increasing σ by $2q + 5c + 11$ will take care of both. Letting $\bar{\sigma} = 2q + 5c + 11$ we thus have that the adversary's chance of forgery is at

most

$$\sum_{1\le r<s\le q} \mathrm{MMcoll}_n(q_r, q_s) + \sum_{r=1}^{q} \mathrm{CMcoll}_n(c, q_s) + \frac{\bar{\sigma}^2}{2}\cdot\frac{1}{2^n} + \frac{1}{2^\tau}$$

This completes the proof of the structure lemma.

8.3 Proof of the M- and MM-Collision Bounds (Lemma 2)

We assume that $m, \bar{m} < 2^{n-2}$, since the specified probability upper bound is meaningless (it exceeds 1) otherwise. According to remarks we have made earlier, this ensures that $\gamma_1, \ldots, \gamma_{\max\{m,\bar{m}\}}, \mathit{huge}$ are distinct nonzero field elements.

We begin with the first inequality. There are $m+3$ points in the set $\mathcal{X}_0$, and we claim that for any two of them, the probability that they coincide is at most $1/2^n$. This is enough to show the first inequality, that the probability of a collision within $\mathcal{X}_0$ is at most $\binom{m+3}{2}\cdot 2^{-n}$. There are a few cases to consider. Below, remember that L and R are random, and everything else is constant. The probabilities are over L, R. In the following, we let $i, i' \in [1..m-1]$, $i \ne i'$.

- $\Pr[X[-1] = X[0]] = \Pr[0^n = M[0] \oplus L] = 1/2^n$.
- $\Pr[X[-1] = X[i]] = \Pr[0^n = M[i] \oplus \gamma_i \cdot L \oplus R] = 1/2^n$.
- $\Pr[X[-1] = X[m]] = \Pr[0^n = M[m] \oplus (\gamma_m \oplus \mathit{huge}) \cdot L \oplus R] = 1/2^n$.
- $\Pr[X[-1] = X[m+1]] = \Pr[0^n = M[m+1] \oplus \gamma_m \cdot L \oplus R] = 1/2^n$.
- $\Pr[X[0] = X[i]] = \Pr[M[0] \oplus L = M[i] \oplus \gamma_i \cdot L \oplus R] = 1/2^n$.
- $\Pr[X[0] = X[m]] = \Pr[M[0] \oplus L = M[m] \oplus (\gamma_m \oplus \mathit{huge}) \cdot L \oplus R] = 1/2^n$.
- $\Pr[X[0] = X[m+1]] = \Pr[M[0] \oplus L = M[m+1] \oplus \gamma_m \cdot L \oplus R] = 1/2^n$.
- $\Pr[X[i] = X[i']] = \Pr[M[i] \oplus \gamma_i \cdot L = M[i'] \oplus \gamma_{i'} \cdot L] = \Pr[M[i] \oplus M[i'] = (\gamma_i \oplus \gamma_{i'}) \cdot L] = 1/2^n$ because $\gamma_i \ne \gamma_{i'}$.
- $\Pr[X[i] = X[m]] = \Pr[M[i] \oplus \gamma_i \cdot L \oplus R = M[m] \oplus (\gamma_m \oplus \mathit{huge}) \cdot L \oplus R] = \Pr[M[i] \oplus \gamma_i \cdot L = M[m] \oplus (\gamma_m \oplus \mathit{huge}) \cdot L] = \Pr[M[i] \oplus M[m] = (\gamma_m \oplus \mathit{huge} \oplus \gamma_i) \cdot L] = 1/2^n$ because $\gamma_i \oplus \gamma_m \ne \mathit{huge}$. The reason that $\gamma_i \oplus \gamma_m \ne \mathit{huge}$ is that *huge* begins with a 1 in bit position 1, while neither γ_i nor γ_m do, because $i, m \le 2^{n-2}$ and $\gamma_i < 2i$, $\gamma_m \le 2m$.
- $\Pr[X[i] = X[m+1]] = \Pr[M[i] \oplus \gamma_i \cdot L \oplus R = M[m+1] \oplus \gamma_m \cdot L \oplus R] = \Pr[M[i] \oplus M[m+1] = (\gamma_i \oplus \gamma_m) \cdot L] = 1/2^n$.
- $\Pr[X[m] = X[m+1]] = \Pr[M[m] \oplus (\gamma_m \oplus \mathit{huge}) \cdot L \oplus R = M[m+1] \oplus \gamma_m \cdot L \oplus R] = \Pr[M[m] \oplus M[m+1] = \mathit{huge} \cdot L] = 1/2^n$.

This completes the first inequality.

For the second inequality, we wish to show that for any point in $\mathcal{X}$ and any point in $\bar{\mathcal{X}}$, the probability that they coincide is at most 2^{-n}. The result follows, since there are at most $(m+2)(\bar{m}+2)$ such pairs. Remember, below, that L, R and $\bar{R}$ are random, and everything else is constant. We let $i \in [1..m-1]$ and $j \in [1..\bar{m}-1]$. As before, $\gamma_1, \ldots, \gamma_m, \mathit{huge}$ are distinct nonzero points.

- $\Pr[X[0] = \bar{X}[0]] = \Pr[M[0] \oplus L = \bar{M}[0] \oplus L] = 0$, since $M[0] \ne \bar{M}[0]$ by assumption.
- $\Pr[X[0] = \bar{X}[j]] = \Pr[M[0] \oplus L = \bar{M}[j] \oplus \gamma_j \cdot L \oplus \bar{R}] = 1/2^n$ due to the influence of $\bar{R}$.
- $\Pr[X[0] = \bar{X}[\bar{m}] = \Pr[M[0] \oplus L = \bar{M}[\bar{m}] \oplus (\gamma_{\bar{m}} \oplus \mathit{huge}) \cdot L \oplus \bar{R}] = 1/2^n$ due

to the influence of $\bar{R}$.

- $\Pr[X[0] = \bar{X}[\bar{m}+1] = \Pr[M[0] \oplus L = \bar{M}[\bar{m}+1] \oplus \gamma_{\bar{m}} \cdot L \oplus \bar{R}] = 1/2^n$ due to the influence of $\bar{R}$.
- $\Pr[X[i] = \bar{X}[j]] = \Pr[M[i] \oplus \gamma_i \cdot L \oplus R = \bar{M}[j] \oplus \gamma_j \cdot L \oplus \bar{R}] = 1/2^n$ due to the influence of $\bar{R}$.
- $\Pr[X[i] = \bar{X}[\bar{m}]] = \Pr[M[i] \oplus \gamma_i \cdot L \oplus R = \bar{M}[\bar{m}] \oplus (\gamma_{\bar{m}} \oplus \mathit{huge}) \cdot L \oplus \bar{R}] = 1/2^n$ due to the influence of $\bar{R}$.
- $\Pr[X[i] = \bar{X}[\bar{m}+1] = \Pr[M[i] \oplus \gamma_i \cdot L \oplus R = \bar{M}[\bar{m}+1] \oplus \gamma_{\bar{m}} \cdot L \oplus \bar{R}] = 1/2^n$ due to the influence of $\bar{R}$.
- $\Pr[X[m] = \bar{X}[\bar{m}] = 1/2^n$, as before, due to the influence of $\bar{R}$.
- $\Pr[X[m] = \bar{X}[\bar{m}+1] = 1/2^n$ for the same reason.
- $\Pr[X[m+1] = \bar{X}[\bar{m}+1] = 1/2^n$ for the same reason.

The remaining cases follow by symmetry. This completes the proof.

8.4 Proof of the CM-Collision Bound (Lemma 3)

Proof. At the top level, we consider two cases: $N \neq \bar{N}$ and $N = \bar{N}$. The second of these will be analyzed by breaking into four subcases.

Case 1: $N \neq \bar{N}$. In this case there are two ways for *bad* to be set to `true`: it can happen at line 31 or line 44 in the game that defines the CMcoll_n collision probability (Figure 3). Let us first calculate the probability that *bad* is set to `true` at line 31, which is

$$\Pr[\mathit{bad} \text{ is set at line } 31] = \Pr[N \oplus L \in \{0^n,\ \bar{X}[1], \ldots, \bar{X}[\bar{m}+1]\}]$$

Notice that the point $\bar{X}[0] = \bar{N} \oplus L$ in the domain of π has been omitted from set $B = \{0^n,\ \bar{X}[1], \ldots, \bar{X}[\bar{m}], \bar{X}[\bar{m}+1]\}$, and we know this point is different from $N \oplus L$ since $N \neq \bar{N}$. The probability above is taken over L and $\bar{R}$, where each $\bar{X}[i]$ implicitly depends on both. We claim that for each of the $\bar{m}+2$ values in B, the probability that $N \oplus L$ is equal to this particular value is exactly $1/2^n$. This is verified by:

- $\Pr[N \oplus L = 0^n] = 1/2^n$ because of the random L.
- For any $j \in [1..\bar{m}-1]$, $\Pr[N \oplus L = \bar{X}[j]] = \Pr[N \oplus L = \bar{M}[j] \oplus \gamma_j \cdot L \oplus \bar{R}] = 1/2^n$ because of the random $\bar{R}$.
- Similarly, $\Pr[N \oplus L = \bar{M}[\bar{m}] \oplus (\gamma_{\bar{m}} \oplus \mathit{huge}) \cdot L \oplus \bar{R}] = 1/2^n$ because of the random $\bar{R}$.
- Similarly, $\Pr[N \oplus L = \bar{M}[\bar{m}+1]] = \Pr[N \oplus L = \mathrm{Checksum}' \oplus \gamma_{\bar{m}} \cdot L \oplus \bar{R}] = 1/2^n$ because of the random $\bar{R}$.

We conclude that

$$\Pr[\mathit{bad} \text{ is set at line } 31] \ \leq\ \frac{\bar{m}+2}{2^n} \tag{5}$$

We next show that

$$\Pr[X[c] \in \mathrm{Domain}(\pi) \text{ at line } 40] \ \leq\ \frac{c+\bar{m}+3}{2^n} \tag{6}$$

For this, let us define S to be

$$S = \{0^n,\ \bar{X}[0], \bar{X}[1], \ldots, \bar{X}[\bar{m}+1],\ X[0], X[1], \ldots, X[c-1]\}$$

This is the domain of π at the time that line 40 is executed. The set has $c+\bar{m}+3$ points and we shall use the sum bound to see that the probability that $X[m]$ is one of these is at most $(c+\bar{m}+3)/2^n$. Namely,

- $\Pr[X[c] = 0^n] = \Pr[\mathrm{len}(C[c]) \oplus (\gamma_m \oplus \mathit{huge}) \cdot L \oplus R = 0^n] = 1/2^n$ as the right-hand side of the equality sign does not depend on R.
- $\Pr[X[c] = \bar{X}[0]] = \Pr[\mathrm{len}(C[c]) \oplus (\gamma_c \oplus \mathit{huge}) \cdot L \oplus R = \bar{N} \oplus L] = 1/2^n$ for the same reason.
- For $j \in [1..\bar{m}-1]$, $\Pr[\mathrm{len}(C[c]) \oplus (\gamma_c \oplus \mathit{huge}) \cdot L \oplus R = \bar{M}[j] \oplus \gamma_j \cdot L \oplus \bar{R}] = 1/2^n$ for the same reason.
- $\Pr[X[c] = \bar{X}[\bar{m}]] = \Pr[\mathrm{len}(C[c]) \oplus (\gamma_c \oplus \mathit{huge}) \cdot L \oplus R = \bar{M}[\bar{m}] \oplus (\gamma_{\bar{m}} \oplus \mathit{huge}) \cdot L \oplus \bar{R}] = 1/2^n$ for the same reason.
- $\Pr[X[c] = \bar{X}[\bar{m}+1]] = \Pr[\mathrm{len}(C[c]) \oplus (\gamma_c \oplus \mathit{huge}) \cdot L \oplus R = \mathrm{Checksum}' \oplus \gamma_{\bar{m}} \cdot L \oplus \bar{R}] = 1/2^n$ for the same reason.
- $\Pr[X[c] = X[0]] = \Pr[\mathrm{len}(C[c]) \oplus (\gamma_c \oplus \mathit{huge}) \cdot L \oplus R = N \oplus L] = 1/2^n$ for the same reason.
- For $i \in [1..c-1]$, $X[i]$ is determined in one of two possible ways: either it is a value already placed into the Domain(π) (the **then** clause at line 37 was executed) or else it is a randomly selected value in $\{0,1\}^n$ (the **else** clause was executed). In the former case, the sum bound has already accounted for the probability of a collision with $X[i]$. In the latter case, the chance of the random value colliding with $X[c] = \mathrm{len}(C[c]) \oplus (\gamma_c \oplus \mathit{huge}) \cdot L \oplus R$ is $1/2^n$.

Equation (6) has now been established.

Next we observe that

$$\Pr[X[c+1] \in \mathrm{Domain}(\pi) \text{ at line } 44 \ \mid\ X[c] \notin \mathrm{Domain}(\pi) \text{ at line } 40\ ] \leq \frac{c+\bar{m}+4}{2^n} \tag{7}$$

The reason is that, when the conditioning event happens, $Y[c]$ is selected as a random point in $\{0,1\}^n$ at line 40, which results in Checksum being a random value independent of the points in the domain of π, which results in $X[c+1]$ being a random value independent of the points in the domain of π. Since the domain of π has at most $1 + (\bar{m}+2) + (c+1) = c+\bar{m}+4$ points at this time, Equation (7) follows. Now, summing Equations (5), (6) and (7) gives us that

$$\Pr[\mathit{bad} \text{ gets set} \ \mid\ \text{Case 1}\ ] \leq \frac{3\bar{m}+2c+9}{2^n} \tag{8}$$

Case 2A: $N = \bar{N}$ and $c \neq \bar{m}$. The next case we consider is when $N = \bar{N}$ and $c \neq \bar{m}$. Redefine S to be

$$S = \{0^n,\ \bar{X}[0], \ldots, \bar{X}[\bar{m}+1],\ X[1], \ldots, X[c-1]\}$$

This is Domain(π) at the time line 40 is executed. We show that

$$\Pr[X[c] \in S \ \mid \ \text{Case 2a}\ ] \ \leq \ \frac{c+\bar{m}+2}{2^n} \tag{9}$$

To show this, one has as before to go through the $c+\bar{m}+2$ points of S:

- $\Pr[X[c] = 0^n] = \Pr[\text{len}(C[c]) \oplus (\gamma_c \oplus \mathit{huge}) \cdot L \oplus R = 0^n] = 1/2^n$.
- $\Pr[X[c] = N \oplus L] = \Pr[\text{len}(C[c]) \oplus (\gamma_c \oplus \mathit{huge}) \cdot L \oplus R = N \oplus L] = 1/2^n$.
- For $j \in [1..\bar{m}-1]$, $\Pr[X[c] = \bar{X}[j]] = \Pr[\text{len}(C[c]) \oplus (\gamma_c \oplus \mathit{huge}) \cdot L \oplus R = \bar{M}[j] \oplus \gamma_j \cdot L \oplus R] = \Pr[\text{len}(C[c]) \oplus \bar{M}[j] = (\gamma_j \oplus \gamma_c \oplus \mathit{huge}) \cdot L] = 1/2^n$ since $\gamma_j \oplus \gamma_c \neq \mathit{huge}$. The reason that $\gamma_j \oplus \gamma_c \neq \mathit{huge}$ is that $\gamma_j < 2j \leq 2\bar{m} \leq 2 \cdot 2^{n-2} = 2^{n-1}$, so γ_j begins with a 0-bit; and $\gamma_c < 2c \leq 2\bar{m} \leq 2 \cdot 2^{n-2} = 2^{n-1}$, so γ_c begins with a 0-bit; so the xor of γ_j and γ_c begins with a 0-bit, while *huge* begins with a 1-bit, so they are certainly unequal.
- $\Pr[X[c] = \bar{X}[\bar{m}]] = \Pr[\text{len}(C[c]) \oplus (\gamma_c \oplus \mathit{huge}) \cdot L \oplus R = \text{len}(\bar{M}[\bar{m}]) \oplus (\gamma_{\bar{m}} \oplus \mathit{huge}) \cdot L \oplus R] = \Pr[\text{len}(C[c]) \oplus \text{len}(\bar{M}[\bar{m}]) = (\gamma_c \oplus \gamma_{\bar{m}}) \cdot L] = 1/2^n$ since $\gamma_c \neq \gamma_{\bar{m}}$ (since $c \neq \bar{m}$).
- $\Pr[X[c] = \bar{X}[\bar{m}+1]] = \Pr[\text{len}(C[c]) \oplus (\gamma_c \oplus \mathit{huge}) \cdot L \oplus R = \text{Checksum}' \oplus \gamma_{\bar{m}} \cdot L \oplus R] = \Pr[\text{len}(C[c]) \oplus \text{Checksum}' = (\gamma_c \oplus \mathit{huge} \oplus \gamma_{\bar{m}}) \cdot L] = 1/2^n$ as before.
- For $i \in [1..c-1]$, either $X[i]$ was selected as a value already in Domain(π), in which case the sum bound has already accounted for the probability of a collision with $X[c]$, or else $X[i]$ was selected as a new random value, in which case it has a $1/2^n$ chance of colliding with $X[c]$.

We have established (9). Next, as before, if $X[c] \notin S$ then $Y[c]$ is chosen at random, making Checksum random, and making $X[c+1]$ random. Thus

$$\Pr[X[c+1] \in \text{Domain}(\pi) \text{ at line 44} \ \mid \ X[c] \notin \text{Domain}(\pi) \text{ at line 40}\ ] \leq \frac{c+\bar{m}+3}{2^n} \tag{10}$$

since the size of the domain of π at line 44 is at most $c+\bar{m}+3$. Adding Equations (9) and (10) we have that

$$\Pr[\mathit{bad} \text{ gets set} \ \mid \ \text{Case 2A}] \ \leq \ \frac{2c+2\bar{m}+5}{2^n} \tag{11}$$

Case 2B: $N = \bar{N}$ and $c = \bar{m}$ and $\exists\, a,\ a < c$, s.t. $C[a] \neq \bar{C}[a]$. In this case, let $a \geq 1$ be the smallest index such that $C[a] \neq \bar{C}[a]$. We claim that $Y[a]$ is almost certainly not in the range of π when this point is examined at line 37, when $i = a$. In fact, we claim something stronger: that $Y[a]$ is almost certainly different from every point in

$$S = \{L,\ \bar{Y}[0], \ldots, \bar{Y}[c+1],\ Y[1], \ldots, Y[a-1],\ Y[a+1], \ldots, Y[c-1]\}$$

In particular,

$$\Pr[Y[a] \in S] \ \leq \ \frac{c+\bar{m}}{2^n} \tag{12}$$

This is verified by going through each point in S, exactly as before. This time, for each point in S except $\bar{Y}[a]$, the probability that this point coincides with $Y[a]$ is

exactly $1/2^n$. The probability that $\bar{Y}[a] = Y[a]$ is 0, since $C[a] \neq \bar{C}[a]$.

Now we modify the game which defines CMcoll_n so that $X[a]$ is always selected at random from $\{0,1\}^n$. If we bound the probability that *bad* gets set in this new game and then add to it the bound of Equation (12), the result bounds the probability that *bad* gets set in Case 2B. From now on in this case analysis, assume this new game.

Next we claim that $X[c]$ is almost certainly different from $X[a]$:

$$\Pr[X[c] = X[a]] \;=\; \frac{1}{2^n} \tag{13}$$

This is clear because, in the modified game we have described, $X[a]$ is now chosen at random, independent of $X[c] = \text{len}(C[c]) \oplus (\mathit{huge} \oplus \gamma_c) \cdot L \oplus R$.

We may now modify the game once again so that $Y[c]$ is selected at random even in the case that $X[c] = X[a]$. Bounding the probability of *bad* being set in the new game, and adding in the bound of (13), serves to bound the probability of *bad* being set in the prior game.

Now we can look at the probability that $X[c+1] \in \text{Domain}(\pi)$ when this is checked in the modified game. At this point the domain of π contains the $2c+3$ points

$$\text{Domain}^* \;=\; \{0^n,\ \bar{X}[0], \ldots, \bar{X}[\bar{m}+1],\ X[1], \ldots, X[a], \ldots, X[c]\}$$

We want to know the probability that $X[c+1] = \text{Checksum} \oplus \gamma_c \cdot L \oplus R$ is in this set. The value Checksum now contains the point $X[a]$, which, in the modified game, has just been selected at random and independent of all points in Domain^* with the exception of $X[a]$ itself. So for each of these $2c+2$ points, the probability that it coincides with $X[c+1]$ is $1/2^n$. For the one remaining point $X[a]$, note that $\Pr[X[c+1] = X[a]] = 1/2^n$, as the probability can be rewritten as $\Pr[\gamma_c \cdot L \oplus R = \text{Checksum}']$, where $\text{Checksum}'$ (which is Checksum without the $X[a]$) is independent of L and R. Thus

$$\Pr[X[c+1] \in \text{Domain}(\pi) \text{ in the modified game}] \;\leq\; \frac{c+\bar{m}+3}{2^n} \tag{14}$$

Summing Equations (12), (13), and (14), we conclude that

$$\Pr[\mathit{bad} \text{ gets set} \;\mid\; \text{Case 2B}\,] \;\leq\; \frac{2c+2\bar{m}+4}{2^n} \tag{15}$$

Case 2C: $N = \bar{N}$ and $c = \bar{m}$ and $C[i] = \bar{C}[i]$ for all $1 \leq i < c$ and $|C[c]| = |\bar{C}[c]|$. In this case, necessarily $C[c] \neq \bar{C}[c]$. Note that Checksum has a known value, which is different from $\text{Checksum}'$, being exactly $\text{Checksum}' \oplus \bar{C}[c]\,0^* \oplus C[c]\,0^*$. The values $M[1], \ldots, M[c-1]$ are likewise known, being identical to $\bar{M}[1], \ldots, \bar{M}[c-1]$, respectively. We are interested in

$$\Pr[X[c+1] \in \{0^n, X[0], \ldots, X[c], \bar{X}[c+1]\}$$

One goes through each of the points, as before, and sees that the probability that $X[c+1] = \text{Checksum} \oplus \gamma_c \cdot L \oplus R$ is any one of them is $1/2^n$, except for the last

point, for which the probability that they coincide is 0. Thus

$$\Pr[\textit{bad} \text{ gets set} \quad | \quad \text{Case 2C }] \;\leq\; \frac{c+2}{2^n} \tag{16}$$

Case 2D: $N = \bar{N}$ and $c = \bar{m}$ and $C[i] = \bar{C}[i]$ for all $1 \leq i < c$ and $|C[c]| \neq |\bar{C}[c]|$. For this case, we first claim that $X[c]$ is almost certainly not in the domain of π when this is inspected at line 40 of Figure 3. The method is as before. The point $X[c]$ is certain to be different from $\bar{X}[c]$, and its chance of coinciding with any of the $c+2$ points in $\{0^n, X[0], X[1], \ldots, X[c-1], \bar{X}[c+1]\}$ is easily verified to be $1/2^n$. Thus

$$\Pr[X[c] \in \text{Domain}(\pi) \text{ at line 40 }] \;\leq\; \frac{c+2}{2^n} \tag{17}$$

Proceeding as before,

$$\Pr[X[c+1] \in \text{Domain}(\pi) \text{ at line 44} \quad | \quad X[c] \notin \text{Domain}(\pi) \text{ at line 38 }] \;\leq\; \frac{c+3}{2^n} \tag{18}$$

since $c+3$ bounds the size of the domain when line 44 is executed, and the conditioning event ensures a random value for $X[c+1]$ which is independent of these points. Summing the bounds of Equation (17) and (18) gives

$$\Pr[X[c+1] \in \text{Domain}(\pi) \text{ at line 44 }] \;\leq\; \frac{2c+5}{2^n} \tag{19}$$

Conclusion. Taking the maximum from Equations (8), (11), (15), (16), and (19) we have

$$\Pr[\textit{bad} \text{ gets set }] \;\leq\; \frac{3\bar{m}+2c+9}{2^n}$$

which is the lemma. □

8.5 Proof of the Privacy Bound (Lemma 4)

The proof is straightforward compared to authenticity, so we quickly go though it. We begin by following the proof of the Structure Lemma (Appendix 8.2). Games A to D are defined as before, except that

- The second half of each game is omitted, since there is no forgery attempt in this context.
- Return the truncated final-ciphertext-blocks, instead of the full final-ciphertext blocks, as the games specify.

Focus on the (modified) game C, where we have now returned to the adversary A a random string of $|M_r| + \tau$ bits whenever a query M_r is asked. Furthermore, the behavior of game C coincides with the behavior of the original game A unless the flag *bad* is set to `true`, at which point the two games diverge. Thus we can bound $\mathbf{Adv}^{\text{priv}}_{\text{OCB}[\text{Perm}(n),\tau]}(A)$ by bounding the probability that the flag *bad* is set to `true` in (the modified) game C, which is at most the probability that it gets set

in Game D. From the same reasoning as in the structure lemma, this is at most

$$\frac{(\sigma+2q+1)^2}{2^{n+1}} + \max_{\substack{m_1,\ldots,m_q \\ \sum m_i=\sigma \\ m_i\geq 1}} \left\{ \sum_{r\in[1..q]} \mathrm{Mcoll}_n(m_r) + \sum_{1\leq r<s\leq q} \mathrm{MMcoll}_n(m_r,m_s) \right\}$$

which is precisely the bound given by the the lemma. ∎

ACKNOWLEDGMENTS

At CRYPTO '00, Virgil Gligor described [Gligor and Donescu 2000a] to Rogaway, Charanjit Jutla gave a rump-session talk on [Jutla 2000a], and Elaine Barker announced a first modes-of-operation workshop organized by NIST. These events inspired [Rogaway 2000], which evolved into the current work. After the first workshop NIST made a second call for proposals, and OCB took its final form in response to this call [Rogaway et al. 2001a]. We appreciate NIST's effort to solicit and evaluate modern modes of operation. Elaine Barker, Morris Dworkin, and Jim Foti are among those involved.

We received useful feedback from Michael Amling, Paulo Barreto, Johan Håstad, Hugo Krawczyk, Helger Lipmaa, David McGrew, Silvio Micali, Ilya Mironov, Alberto Pascual, Bart Preneel, Tom Shrimpton, and David Wagner. Special thanks to Michael and Ilya for their careful proofreading, and Helger for doing a state-of-the-art assembly implementation and providing associated timing data. Deepest thanks to Ted Krovetz who provided an implementation and performance figures. Thanks to the anonymous referees for their comments.

This work was carried out while Rogaway was on leave of absence from UC Davis, visiting the Department of Computer Science, Faculty of Science, Chiang Mai University.

Mihir Bellare received support from NSF grant CCR-0098123, NSF grant ANR-0129617, and an IBM Faculty Partnership Development Award.

John Black received support from NSF CAREER award CCR-0133985 and the University of Colorado. Part of this work was carried out while John was at the University of Nevada, Reno.

REFERENCES

An, J. and Bellare, M. 2001. Does encryption with redundancy provide authenticity? In *Advances in Cryptology — EUROCRYPT 2001*, B. Pfitzmann, Ed. Lecture Notes in Computer Science, vol. 2045. Springer-Verlag, 512–528. See www-cse.ucsd.edu/users/mihir.

Aoki, K. and Lipmaa, H. 2000. Fast Implementations of AES Candidates. In *The Third Advanced Encryption Standard Candidate Conference*. National Institute of Standards and Technology, New York, NY, USA, 106–120. See www.tml.hut.fi/∼helger.

Bellare, M., Desai, A., Jokipii, E., and Rogaway, P. 1997. A concrete security treatment of symmetric encryption: Analysis of the DES modes of operation. In *Proceedings of 38th Annual Symposium on Foundations of Computer Science (FOCS 97)*. ACM Press, 394–403. See www.cs.ucdavis.edu/∼rogaway.

Bellare, M., Desai, A., Pointcheval, D., and Rogaway, P. 1998. Relations among notions of security for public-key encryption schemes. In *Advances in Cryptology — CRYPTO '98*, H. Krawczyk, Ed. LNCS, vol. 1462. Springer-Verlag, 232–249. See www.cs.ucdavis.edu/∼rogaway.

Bellare, M., Guérin, R., and Rogaway, P. 1995. XOR MACs: New methods for message authentication using finite pseudorandom functions. In *Advances in Cryptology — CRYPTO*

'95, D. Coppersmith, Ed. Lecture Notes in Computer Science, vol. 963. Springer-Verlag, 15–28. See www.cs.ucdavis.edu/∼rogaway.

Bellare, M., Kilian, J., and Rogaway, P. 2000. The security of the cipher block chaining message authentication code. *Journal of Computer and System Sciences (JCSS) 61,* 3 (Dec.), 362–399. Earlier version in CRYPTO '94. See www.cs.ucdavis.edu/∼rogaway.

Bellare, M. and Namprempre, C. 2000. Authenticated encryption: Relations among notions and analysis of the generic composition paradigm. In *Advances in Cryptology — ASIACRYPT '00*, T. Okamoto, Ed. Lecture Notes in Computer Science, vol. 1976. Springer-Verlag, 531–545. See www-cse.ucsd.edu/users/mihir.

Bellare, M. and Rogaway, P. 2000. Encode-then-encipher encryption: How to exploit nonces or redundancy in plaintexts for efficient encryption. In *Advances in Cryptology — ASIACRYPT '00*, T. Okamoto, Ed. Lecture Notes in Computer Science, vol. 1976. Springer-Verlag, 317–330. See www.cs.ucdavis.edu/∼rogaway.

Black, J. and Urtubia, H. 2002. Side-channel attacks on symmetric encryption schemes: the case for authenticated encryption. In *Proceedings of the 11th USENIX Security Symposium*. USENIX, 327–338. See www.cs.colorado.edu/∼jrblack/.

Bleichenbacher, D. 1998. Chosen ciphertext attacks against protocols based on the RSA encryption standard PKCS #1. In *Advances in Cryptology — CRYPTO '98*, H. Krawczyk, Ed. Lecture Notes in Computer Science, vol. 1462. Springer-Verlag, 1–12. See www.bell-labs.com/user/bleichen.

Dolev, D., Dwork, C., and Naor, M. 2000. Non-malleable cryptography. *SIAM Journal on Computing 3,* 2, 391–497. Earlier version appeared at STOC '91. See www.wisdom.weizmann.ac.il/∼naor/.

Gligor, V. and Donescu, P. 1999. Integrity-aware PCBC encryption schemes. In *Security Protocols, 7th International Workshop*, B. Christianson, B. Crispo, J. A. Malcolm, and M. Roe, Eds. Lecture Notes in Computer Science, vol. 1796. Springer-Verlag, 153–171.

Gligor, V. and Donescu, P. 2000a. Fast encryption and authentication: XCBC encryption and XECB authentication modes. Manuscript, Aug 18. See www.eng.umd.edu/∼gligor.

Gligor, V. and Donescu, P. 2000b. Fast encryption and authentication: XCBC encryption and XECB authentication modes. Contribution to NIST, Oct 27, 2000. See csrc.nist.gov/encryption/aes/modes.

Gligor, V. and Donescu, P. 2000c. Fast encryption and authentication: XCBC encryption and XECB authentication modes. Contribution to NIST, Mar 30, 2001, rev. Apr 20, 2001. See csrc.nist.gov/encryption/aes/proposedmodes.

Gligor, V. and Donescu, P. 2002. Fast encryption and authentication: XCBC encryption and XECB authentication modes. In *Fast Software Encryption, 8th International Workshop, FSE 2001*, M. Matsui, Ed. Lecture Notes in Computer Science, vol. 2355. Springer-Verlag, 92–108. See www.ece.umd.edu/∼gligor/.

Goldwasser, S. and Micali, S. 1984. Probabilistic encryption. *Journal of Computer and System Sciences 28*, 270–299.

Halevi, S. 2001. An observation regarding Jutla's modes of operation. Cryptology ePrint archive, reference number 2001/015, submitted Feb 22, 2001, revised Apr 2, 2001. See eprint.iacr.org.

Jutla, C. 2000a. Encryption modes with almost free message integrity. Cryptology ePrint archive, reference number 2000/039, Aug 1, 2000. See eprint.iacr.org.

Jutla, C. 2000b. Encryption modes with almost free message integrity. Contribution to NIST. Undated manuscript, appearing Oct 2000 at csrc.nist.gov/encryption/modes/workshop1.

Jutla, C. 2001a. Encryption modes with almost free message integrity. In *Advances in Cryptology — EUROCRYPT 2001*, B. Pfitzmann, Ed. Lecture Notes in Computer Science, vol. 2045. Springer-Verlag.

Jutla, C. 2001b. Encryption modes with almost free message integrity. Contribution to NIST. Undated manuscript, posted May 24, 2001 at NIST web site csrc.nist.gov/encryption/modes/proposedmodes.

Katz, J. and Yung, M. 2000a. Complete characterization of security notions for probabilistic private-key encryption. In *Proceedings of the Thirty-Second Annual ACM Symposium on Theory of Computing (STOC 2000)*. ACM Press, 245–254.

Katz, J. and Yung, M. 2000b. Unforgeable encryption and adaptively secure modes of operation. In *Fast Software Encryption, 7th International Workshop, FSE 2000*, B. Schneier, Ed. Lecture Notes in Computer Science, vol. 1978. Springer-Verlag, 284–299.

Krawczyk, H. 2001. The order of encryption and authentication for protecting communications (or: How secure is SSL?). In *Advances in Cryptology — CRYPTO 2001*, J. Kilian, Ed. Lecture Notes in Computer Science, vol. 2139. Springer-Verlag, 310–331.

Lipmaa, H. 2001. Personal communications. July 2001. Further information available at www.tml.hut.fi/∼helger.

Luby, M. and Rackoff, C. 1988. How to construct pseudorandom permutations from pseudorandom functions. *SIAM Journal of Computing 17,* 2 (Apr.), 373–386.

Manger, J. 2001. A chosen ciphertext attack on RSA optimal asymmetric encryption padding OAEP as standardized in PKCS#1 v2.0. In *Advances in Cryptology — CRYPTO '01*, J. Kilian, Ed. Lecture Notes in Computer Science, vol. 2139. Springer-Verlag, 230–238.

Meyer, C. H. and Matyas, S. M. 1982. *Cryptography: A New Dimension in Computer Data Security*. John Wiley and Sons, New York.

Preneel, B. 1998. Cryptographic primitives for information authentication — State of the art. In *State of the Art in Applied Cryptography, COSIC '97*. Lecture Notes in Computer Science, vol. 1528. Springer-Verlag, 49–104.

Rogaway, P. 2000. OCB mode: Parallelizable authenticated encryption. Contribution to NIST, Oct 16, 2000 (Preliminary version of the OCB algorithm). See csrc.nist.gov/encryption/modes/workshop1.

Rogaway, P. 2002. Authenticated-encryption with associated-data. In *ACM Conference on Computer and Communications Security (CCS-9)*. ACM Press, 196–205.

Rogaway, P., Bellare, M., Black, J., and Krovetz, T. 2001b. OCB: A block-cipher mode of operation for efficient authenticated encryption. In *ACM Conference on Computer and Communications Security (CCS-8)*. ACM Press, 196–205.

Rogaway, P., Bellare, M., Black, J., and Krovetz, T. 2001a. OCB mode. Contribution to NIST, Apr 1, 2001, revised Apr 18, 2001. See csrc.nist.gov/encryption/modes/proposedmodes.

RSA Laboratories. 1998. PKCS #1: RSA encryption standard, Version 1.5, PKCS #1: RSA cryptography specifications, Version 2.0, Sep 1998, B. Kaliski and J. Staddon. See www.rsasecurity.com/rsalabs/pkcs/pkcs-1.

Schroeppel, R. 2001. Personal communications.

Steiner, J., Neuman, C., and Schiller, J. 1988. Kerberos: an authentication service for open network systems. In *Proceedings of the Winter 1988 Usenix Conference*. USENIX Association, 191–201.

US National Institute of Standards. 2001. Specification for the Advanced Encryption Standard (AES). Federal Information Processing Standards Publication 197. Based on J. Daemen and V. Rijmen, AES Proposal: Rijndael. Sep 3, 1999. See www.nist.gov/aes.

Vaudenay, S. 2002. Security flaws induced by CBC padding — applications to SSL, IPSEC, WTLS. . . . In *Advances in Cryptology — EUROCRYPT '02*, L. Knudsen, Ed. Lecture Notes in Computer Science, vol. 2332. Springer-Verlag, 534–546. See /lasecwww.epfl.ch/∼vaudenay/.

A. BRIEF HISTORY

Jutla, gligor-donescu, rogaway. An April '99 paper by Gligor and Donescu gives an authenticated-encryption scheme called PCBC [Gligor and Donescu 1999]. Though the mode is not correct, as pointed out by Jutla [Jutla 2000a], it may have contributed to the subsequent development of correct modes. Jutla's paper [Jutla 2000a] gives the first correct schemes, IACBC and IAPM. Shortly after that paper appeared, Gligor and Donescu described a different scheme, XCBC [Gligor and

Donescu 2000a], which is similar to IACBC. The most conspicuous difference between XCBC and IACBC is the former's use of mod-2^n addition where the latter uses xor or mod-p addition, for p a prime just less than 2^n.

A first call by NIST for modes of operation brought contributions [Gligor and Donescu 2000b; Jutla 2000b] based on [Gligor and Donescu 2000a; Jutla 2000a], and a contribution by Rogaway [Rogaway 2000] that built on [Jutla 2000a]. In [Jutla 2000b], Jutla employs a Gray-code ordering for combining basis offsets, a refinement independently introduced, along with further tricks, in [Rogaway 2000].

A second call by NIST gave rise to [Gligor and Donescu 2000c; Jutla 2001b; Rogaway et al. 2001a], which were revisions to [Gligor and Donescu 2000b; Jutla 2000b; Rogaway 2000], respectively. In [Jutla 2001b], Jutla emphasized IAPM over IACBC, and he adopted "lazy mod-p addition" as described in [Rogaway 2000]. In [Gligor and Donescu 2000c], Gligor and Donescu describe four authenticated-encryption modes, one of which, XECBS-XOR, is parallelizable. The modes adopt some features introduced in [Rogaway 2000] to deal with messages of arbitrary length and to use a single block-cipher key. In [Rogaway et al. 2001a], Rogaway et al. settled on one mechanism to make offsets (three are described in [Rogaway 2000]) and made further refinements to [Rogaway 2000].

Briefly comparing OCB and IAPM, the latter uses two separate keys and is defined only for messages that are a multiple of the block length. Once a padding regime is included, say obligatory 10^* padding, ciphertexts will be longer than OCB's by 1 to n bits. IAPM supports offset-production using either lazy mod-p addition or an xor-based scheme. The latter is not competitive with OCB in terms of key-setup costs.

An earlier version of this paper was published as [Rogaway et al. 2001b].

The history above ignores associated patent applications.

Received Month Year; revised Month Year; accepted Month Year